HIWIN®

Single-Axis Robot

Technical Information

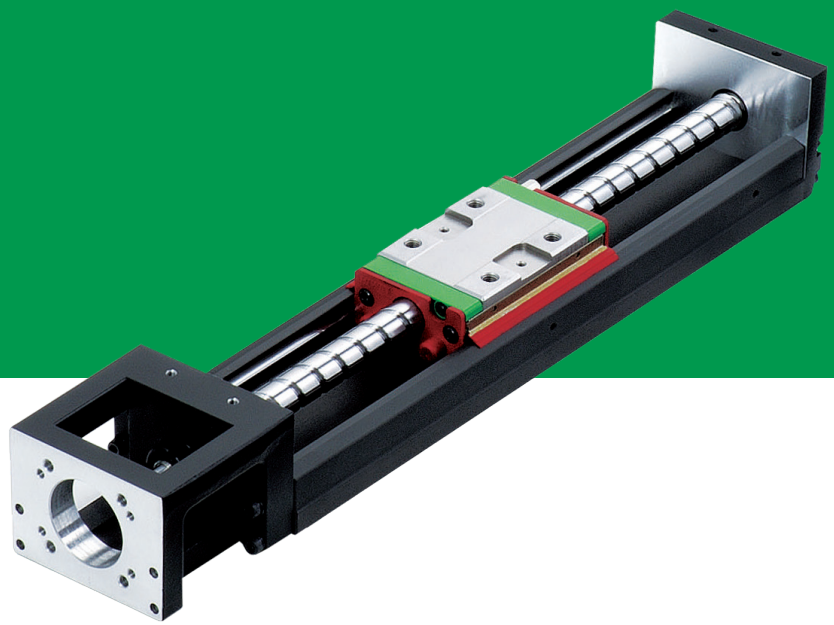

Original Instructions

CE

HIWIN Support

About HIWIN

HIWIN®

Semiconductor Subsystem

Semiconductor / LED / Panel
- EFEM (Equipment Front End Module)
- Wafer Robot
- Load Port
- Wafer Aligner

Multi-Axis Robot

Pick-and-Place / Assembly / Array and Packaging / Semiconductor / Electro-Optical Industry / Automotive Industry / Food Industry
- Articulated Robot
- SCARA Robot
- Electric Gripper
- Integrated Electric Gripper

Single-Axis Robot

Precision / Semiconductor / Medical / FPD
- KK, SK
- KS, KA
- KU, KE, KC
- KA B-TYPE
- KC B-TYPE

Torque Motor Rotary Table

Medical / Automotive Industry / Machine Tools / Machinery Industry
- RAB Series
- RAS Series
- RCV Series
- RCH Series

Wire-cut EDM / Die-sinker EDM / Small-hole Drilling EDM
- RAS-E Series
- RCV-E Series
- RCH-E Series

Ballscrew

Precision Ground / Rolled
- Super S Series
- Super T Series
- Mini Roller
- Ecological & Economical Lubrication Module E2
- Auxiliary Lubrication Module EL
- Rotating Nut (R1, R2)
- Energy-Saving & Thermal-Controlling (Cool Type)
- Heavy Load Series (RD)

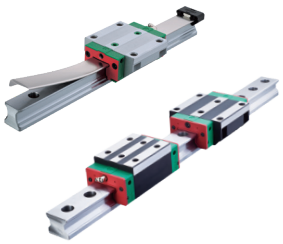

Linear Guideway

Automation / Semiconductor / Medical
- Ball Type-HG, EG, WE, MG, CG
- Quiet Type-QH, QE, QW, QR
- Other-Stainless Steel, AG, RG, E2, EL, PG, SE, RC

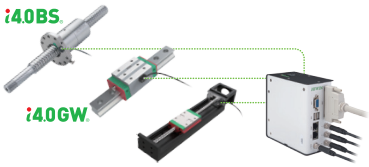

i-Series

Semiconductor / Automation Equipment / Industrial Machines / Machine Tools
- Intelligent 4.0 Ballscrew
- Intelligent 4.0 Guideway
- Intelligent Single-Axis Robot

DATORKER® Strain Wave Gear

Robot / Automation / Semiconductor / Machine Tools
- Standard-DSC, DSH Type
- Heavy Load-DGC, DGH Type
- Lightweight-DLC Type

Ball Spline

Robot / Medical / Automation Equipment / Industrial Machines / Machine Tools / Semiconductor
- Linear ball spline-RS Type, FS Type, FSR Type
- Compound ball spline-FBR Type

Bearing

Machine Tools / Robot / Industrial Machines / Automation
- Crossed Roller Bearing
- Support Unit

Controller / Drive/ AC Servo Motor

Semiconductor / SMT / 3C Electronics / Automation Equipment / New Energy Equipment / Industrial Machinery
- Controller-HIMC3
- Drives-E1, E2 ,D1, D2T/D2T-LM Series
- Motors-E, FR Series

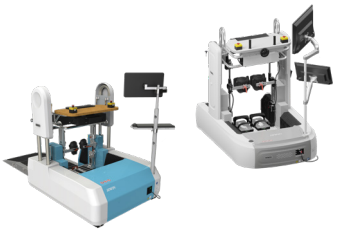

Medical Equipment

Hospital / Rehabilitation Centers / Long-term Care Facility
- Robotic Gait Training System MRG-P110
- Robotic Gait Training System MRG-P100

Linear Motor / Linear Motor System

Automated Transport / AOI Application / Precision Positioning / Semiconductor Application
- Ironcore Linear Motor
- Ironless Linear Motor
- Tubular Motors
- Air Bearing Platform
- XY Stage • Gantry Systems
- Single-Axis Linear Motor Stage

Torque Motor / Direct Drive Motor

Machine Tools / Lithium-ion Battery / Gear Machining and Inspection
- Torque Motor-TM-5, IM-2, TMRW, TM-5(J0) Series

Display / Automation / Semiconductor / Lithium-ion Battery / Robot / Laser Cutting / AOI Inspection
- Direct Drive Motor-DMS, DMY, DMN, DMT, DMH Series

Single-Axis Robot

Technical Information Index

1. Precautions (Be sure to read before handling) 1
2. KK Series 12
3. SK Series 49
4. KC Series 68
5. KA Series 82
6. KS Series 127
7. KU Series 148
8. KE Series 155
9. HIWIN AC Servo Motor & Drive Specification Table 167
10. Motor & Drive 169
11. Lubricating Device 250

(The specifications in this catalog are subject to change without notification.)

1. Precautions(Be sure to read before handling)

1.1 Safety Specifications

⚠ Danger:	Indicates an imminently hazardous situation which, if not avoided, will result in death or serious injury.
⚠ Warning:	Indicates a potentially hazardous situation which could result in death or serious injury, if the equipment is operated incorrectly.
⚠ Caution:	Indicates a potentially hazardous situation which may result in injury and machine damage, if the equipment is operated incorrectly.

These safety instructions are intended to prevent hazardous situations and/or equipment damage. These instructions indicate the level of potential hazard with the labels of "Danger," "Warning", or "Caution." They are all important notes for safety and must be followed in addition to International Standards (ISO/IEC)[Note 1], Japanese Industrial Standards (JIS)[Note 2]and other safety regulations[Note 3].

[Note 1] ISO 10218: Robots and robotics devices - Safety requirement for industrial robots
IEC 60204-1: Safety of machinery – Electrical equipment of machine (Part1: General requirement)

[Note 2] JIS B 9960-1: Safety of machinery – Electrical equipment of machine (Part1: General requirement)
JIS B 8433 : Manipulating industrial robots - Safety

[Note 3] Labor Safety and Health Act .....etc.

◎ This product is designed and manufactured as a component for using in general industrial machinery.

◎ Please make sure to aquire the product specifications from the system designer or someone who has sufficient knowledge and experience. In addition, please read the details of the "Technical Manual" and "Software Operating Manual" carefully and take the educational training for related safety prior to operating this product.

◎ If the gripper is integrated in a system (machine, robot, etc.), the system needs to meet the regulations and standards for safety measures. Check if the system satisfies the regulations and standards first. If so, properly handle the product in accordance with the regulations and standards.

◎ All situations are not covered by the "Danger", "Warning", and "Caution" safety signs. For more details, be sure to read the instruction manuals thoroughly before operation.

⚠ Danger

◎Do not use the product outside specifications. It may cause the product to fail, stop functioning or sustain damage. It may also significantly reduce the service life of the product.

◎If the machine will stop in the event of system problem such as emergency stop or power failure, design a safety circuit or other device to prevent equipment damage or injury.

◎Do not use this product in a place exposed to ignitable, inflammable or explosive substances. It may explode or ignite, resulting in product damage or injury. Hot swapping is forbidden.

◎Please follow the instruction manual when wiring the product. For plug in/plug out of the wire, connect to the terminal quickly and reliably.

◎Please do not use the product with water and oil to avoid electric shock or fire.

◎Before supplying power and operating the product, always check the operation area of the

equipment to ensure safety. When operating or adjusting the gripper, be sure to observe safety measures for the system.

◎Please do not disassemble, or modify the product to avoid personal accident, electric shock, fire or damage.

⚠ Warning

◎Do not expose the product to radiant heat generated from a heat source, and use the product within the ambient temperature range of 5˚C to 45˚C.

◎Use the product in humidity range of 35% to 85% (without dew condensation).

◎Please use the product below altitude of 1000 meters.

◎ Please use when environmental illumination is greater than 500 lux.

◎Do not use the product in an atmosphere of corrosive gases (sulfuric acid or hydrochloric acid). Rust may form and reduce the structural strength of the product.

◎Do not use the product in a place exposed to dust, or iron powder. If dust enters the product through small openings and gaps, the product may suffer damage.

◎ Please do not use the product near severe vibration.

◎Please do not use the product near strong electromagnetic waves, locations that may generate high current, welding operations which may generate electric arc, locations that may generate interference due to static electricity to avoid the abnormal operation of product.

◎Please mount the product and jaws with adequate screw tightening torque.

◎Please do not approach or touch the product while the product is operating.

◎ When a person is accidentally caught into the machine, please turn off the power supply immediately or push the emergency stop button of external safety loop device, and then adjust the jaws position or remove the jaws manually for disengagement.

◎Do not touch the connectors or exposed terminals of the controller. Doing so may result in electric shock.

◎Turn off the power to the product in the event of power failure. Failure to do so may cause the product to suddenly start moving when the power is restored, resulting in injury or product damage.

◎If the product is generating heat, smoke, a strange smell or continual noise, turn off power immediately. Continuing to use the product may result in product damage or fire.

◎If the product does not activate while gripping a workpiece, please cut off the power immediately. Remove the workpiece by adjusting the jaws position or removing the jaws manually. After the abnormal state is corrected restart the power.

◎Please do not grip live or hazardous objects.

◎Prevent load from applying force to one jaw when gripping a workpiece.

◎ When the product is activated, please do not apply any external force on the gripper.

⚠ Caution

◎Do not hold moving parts of the product or its cables during installation. It may result in injury.

◎Do not insert a finger or object in the openings in the product. It may cause fire, electric shock, or injury.

◎The motor generates a large amount of heat during operation, and the product surface temperature is high. Ensure this will not affect a workpiece near the gripper.

◎The actuator cables with the product are flexible, but do not store the cables in a movable cable duct that bends more than the specified bending radius. (Rb $\geq$ 63mm)

◎Do not scratch the actuator cables. Please perform periodic inspections monthly. Scratching, forcible bending, straining, winding, and pinching may cause short circuit and insulation failure, which results in electric shock and malfunction.

◎ When the product is unusable and scrapped, please follow the local waste disposal regulations for handling.

◎ When using this product, please wear safety shoes or the related protective equipment.

◎The mounting face has holes and slots for positioning. Make use of them if necessary.

◎Design the jaws to be lightweight and minimum length.

◎Mass of a workpiece that the jaws can grip greatly differs depending on the material quality, shape, and gripping surface condition of the jaws.

◎Use speed and parameters appropriate with the product to avoid making a great impact to the jaws.

◎Please assure there is sufficient space for maintenance and inspection, and perform regular maintenance every six (6) months or after activating the product 500,000 times.

◎ Please perform maintenance of transmission components in manual mode. After adjusting the gripper to the maximum opening position, please use the greasing device to replenish the grease or apply the grease on the screw shaft and both sides of groove.

◎ The measured result of actual noise level for product is 52.8 dB. (Conditions: distance from the product is 1 meter, height from the ground is 1.6 meters, maximum speed is 80% operating). If the noise level is over 80dB(A) during operation, personal protective equipment is required.

1.2 Warning Sign Location & Description

The warning sign shown below will be on the product to ensure the proper and safe operation.

◎ KK / SK / KC Series:

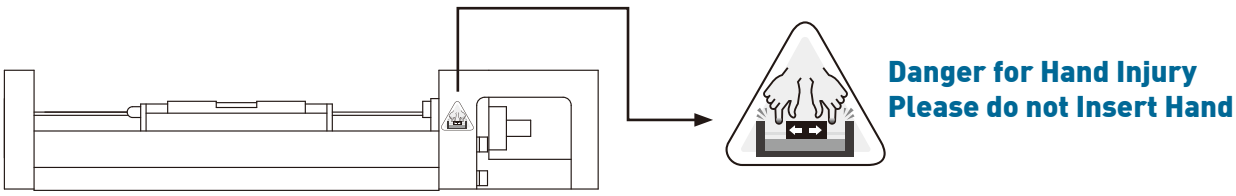

◎ KA / KE Series:

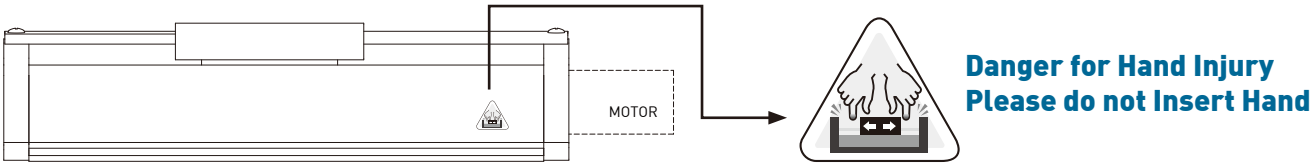

1.3 Features

The HIWIN Single-Axis Robot module utilizes professional standard manufacturing technology developed over the years, with the ballscrew and magnetic slide design module developed and produced by ourselves, HIWIN itis applicable to all types of automation equipment due to its features of easy installation, small size, high-precision and various specifications.

◎Complete selection of single-axis robots and accessories.
Drive type: ballscrew, toothed belt
AC motor output: 30W~750W servo motor or stepping motor
Motor connection type (depends on available space): direct, bottom, internal, left, right
Max stroke:100～2000mm (Dependant on screw speed limit.)

◎Easy installation and maintenance.

◎Customized designs available.

◎Easy transformation into a multi-axis robot.

1.4 Installation guide for motor flange, motor and coupling

◎Three types of displacement may exist while installing the ballscrew with motor axis, which are shown as below.

1. Radial displacement (A):

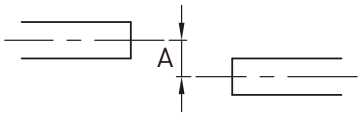

2. Angular displacement (B, degree):

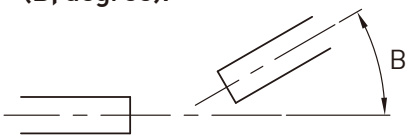

3.Axial displacement(C):

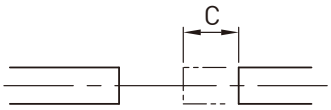

◎Confirmation of axial alignment:

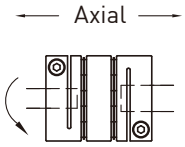

When the ballscrew shaft and motor are connected by a coupling, turn the coupling to confirm if it is capable of rotating without restrictions. This will ensure the concentricity of both axes. The illustration is shown as left.

◎The use of a motor mounting jig might be necessary to make sure the ballscrew spindle end (A) and the positioning hole of the motor flange (B) are concentric. The illustration is shown below.

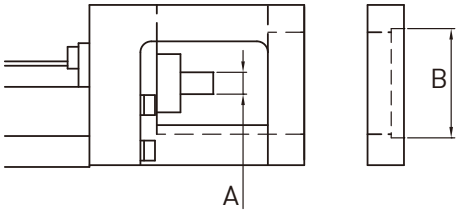

◎Precaution:

1. During motor flange mounting, the displacement between ballscrew spindle end and the positioning hole of the motor flange should be controlled and also within the allowable displacement range of the chosen coupling.

2. The ballscrew spindle end could break if the displacement is beyond the allowable range limit or the coupling is mounted incorrectly.

3. Make sure the allowable displacement of the coupling is sufficient for your application, HIWIN recommends a Disk Type coupling. Please contact HIWIN with any questions regarding coupling installation or selection.

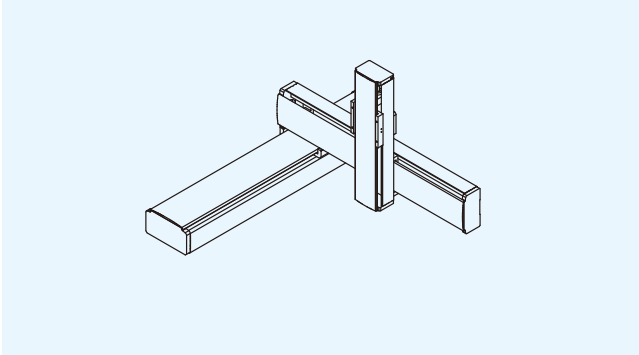
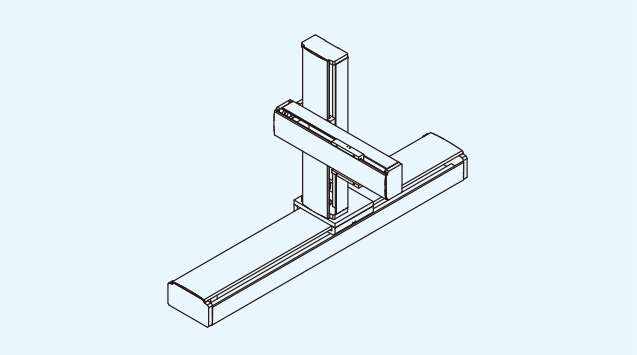
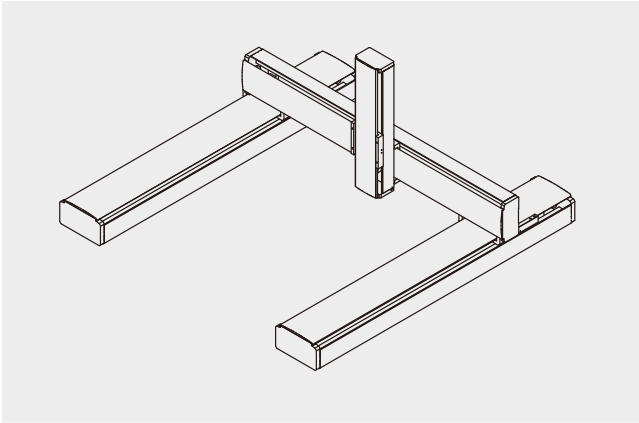
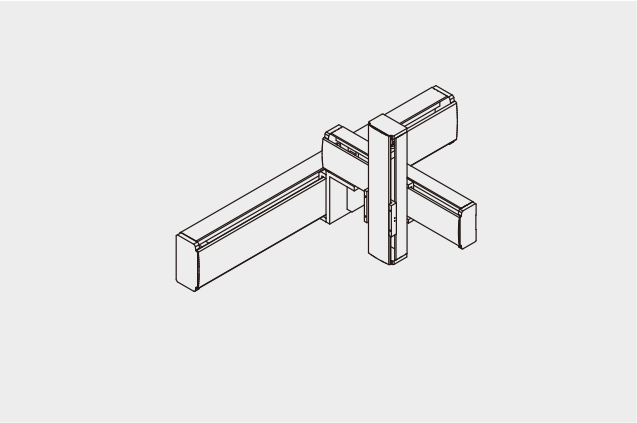
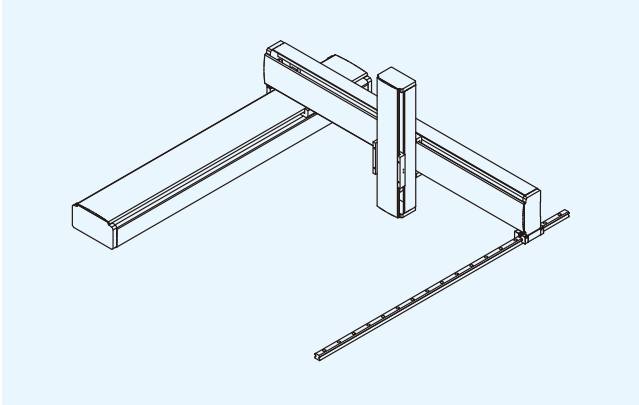
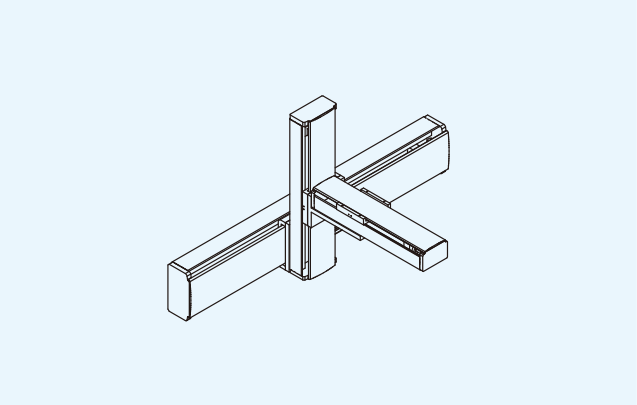
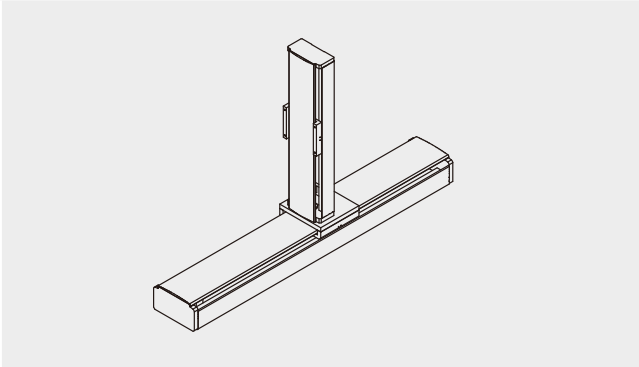
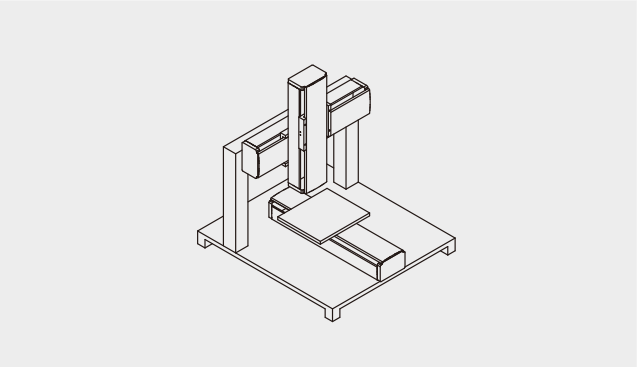

1.5 Applications

Single-axis robots can be used in a wide range of applications. The following are examples of applicable systems: Automatic soldering system, screw feeding machine, adhesive laminating machine, CCD lens shifting, automatic paint spray machine, cutting machine, semiconductor manufacturing equipment, assembly equipment, press machine, spot welding machine, surface processing automation, self adhesive labeling machine, packaging machine, marking press machine, conveying equipment, and more.

1.6 Classification

SPEC	KK High-precision	SK SynchMotion type	KC Lightweight	KA Lightweight	KS Advanced dustproof	KU High-rigidity dustproof	KE Basic dustproof
30	●		●				●
40	●		●				●
50	●		●				●
60	●	●	●			●	
65							●
70							●
80	●					●	
86	●	●					
90				●	●		●
100	●			●	●		
120				●	●		
130	●						
136				●			
140					●		
150				●	●		
170				●			
180					●		
200				●			

Note: KA100/136/170 and KS100/140/180 can also be belt driven for applications requiring high speed and long stroke.

1.7 System Components

Single-axis robot components include a motor, drive, and upper controller as demonstrated below. Our customers may choose from HIWIN's selection of excellent servo motors, stepping motors, and drives.

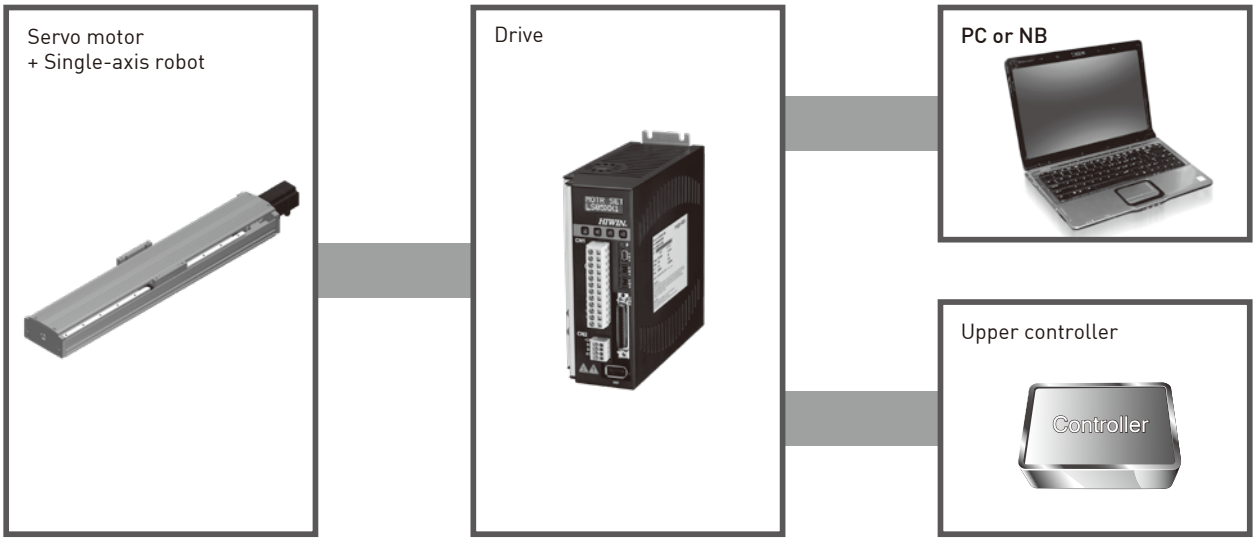

1.8 Selection Process

When choosing an single-axis robot based on different conditions and restrictions, you may refer to the following selection process:

1. User requirements

- Effective stroke
- Location restrictions (width, height, length)
- Installation (horizontal, vertical, side mount)
- Position of gravity, center of loading
- Operating conditions (lead, speed, acceleration and deceleration, duty cycle)
- Environment (high temperature, vibration, oil, water, corrosion)

2. Demand for precision

- Position accuracy
- Repeatability
- Running parallelism

3. Configuration

- Single axis
- Double axis
- Multi axis
- Special combination

4. Motor selection

- AC servo motor
- Stepper motor
- With or without brake (included, plug-in)

5. Motor load calculation

- Maximum speed
- Motor resolution
- Motor torque calculation

6. Operation analysis

- Acceleration
- Actual operation mode (V-T diagram)

7. Other accessories

- The use of related accessories (limit switches, adapter plate, retractable sheath, the slip ring protection tube)

8. Final confirmation

- Conditions of use should be confirmed
- Price, deadline
- Alteration
- Special requirements

For preliminary selection, you may refer to the following single-axis robot characteristics:

SPEC	KK, SK	KC	KA	KS	KU	KE
Precision	Great (repeatability, positioning, parallelism)	Normal (repeatability)	Normal (repeatability)	Normal (repeatability)	Normal (repeatability)	Normal (repeatability)
Load	Heavy	Low	Medium	Medium	Medium	Low
Weight	Heavy	Light	Light	Light	Light	Light
Customized (stroke, lateform)	Yes	Yes	Yes	Yes	Yes	Yes
Stiffness	Good (steel structure)	Normal (Aluminum base combined with steel structure)	Normal (aluminum alloy base)	Normal (aluminum alloy base)	Normal (aluminum alloy base)	Low (guide way base)
Cover	Aluminum	Stainless	Aluminum	Stainless	Stainless	Stainless
Cleanliness	Normal	Good	Normal	Great (with vacuum)	Good	Good
Dust-proof	Normal	Good (fully covered)	Normal	Good (fully covered)	Good (fully covered)	Good (fully covered)
Drive component	Ballscrew (heavy load, good precision)	Ballscrew (good precision)	Ballscrew, belt (long stroke, high speed)	Ballscrew, belt (long stroke, high speed)	Ballscrew (heavy load, good precision)	Ballscrew (good precision)
Connection between motor and ballscrew	Direct, by side belt	Direct, by side belt	Direct, by side belt	Direct, by side belt	Direct	Direct
Inside motor location	No	No	Yes	Yes	No	No
Bellow	Yes (standard)	No	Yes (customized)	No	No	No
Mounting	Top	Top and bottom	Bottom (or top)	Bottom	Any position (bottom, side)	Bottom

1.9 Precision

1. Positioning accuracy

The maximum difference (absolute value) between the actual arrival distance and the reaching distance based on the original setting.

2. Repeatability of round-trip position (precision)

The maximum difference in the entire cycle. The difference in the positioning value measured from a setting position during the round trip movement of the single-axis robot's slider.

3. Running parallelism

(1) The parallelism between single-axis robot module platform plane and module installation plane. Position the scale at the center of the slider, and then put the pointer on the installation plane. Finally, take the maximum deviation value measured in the full stroke as the result.

(2) The parallelism between single-axis robot module platform and the installation datum. Position the scale at the center of the slider, and put the pointer on the installation datum. Finally, take the maximum derviation value measured in the full stroke as the result.

1.10 Speed

1. Maximum linear velocity

The single-axis robot's maximum linear velocity (V) is calculated from the ballscrew speed (S) multiplied by the lead (L).

V(mm/sec)=S(rpm)÷60×L(mm)

2. Maximum rotational speed

The maximum allowable rotational speed of the ballscrew is decided by it's critical rotational speed. If the ballscrew speed exceeds it's critical speed it may result in resonance. Hence, the critical speed is related to the ballscrew length, the critical speed can help to determine the ballscrews effective stroke and total length.

The maximum allowable rotational speed of the ballscrew is calculated as follows:

$$Np = 0.8 \times 2.71 \times 10^8 \times \frac{M_f d_r}{L_t^2}$$

Np = the maximum allowable rotation speed (rpm)
Mf = breakdown of the assembly mounting type; KA uses fixed-support type; Mf=0.689
dr = screw root diameter (mm)
Lt = screw span between bearings (mm)

3. Acceleration/Deceleration

Speed is specified as the working speed of the sliding table. The sliding table must accelerate to the designated speed as it moves to it's target position, in opposite, it must decelerate before it comes to a stop.

Acceleration/deceleration is programmed by the operator according to the needed conditions. The acceleraton on a KA system is set at 0.15G calculated for lead = 5, 0.3G is calculated for all other leads. 1G = 9.8m/s^2, therefore 0.15G = 1470mm/s^2, 0.3G = 2940mm/s^2. The maximum load shown in the catalog is based on this acceleration/deceleration.

Attention Acceleration/deceleration will generate an inertia force on the load. For higher acceleration/deceleration, load will increase accordingly. In addition, higher acceleration/deceleration could generate a possible impact and should be noted.

4. Working cycle

The SR system's working cycle is determined by the operator. The below diagram illustrates how the working cycle is generally calculated. The variables include acceleration time Ta, constant speed time Tc, deceleration time Td, and idling time Tf.

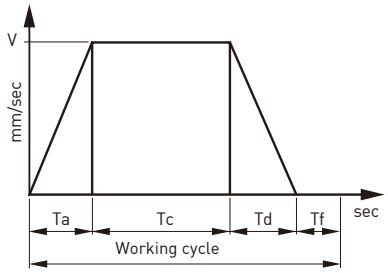

Accelerating Speed=V/Ta
Decelerating Speed=V/Td
Working cycle(sec)= Ta + Tc + Td + Tf
Working time=working cycle × frequency
Operating ratio=working time / (working time+off time)
Operating ratio is closely related to the load of the motor. Normally, the operating ratio is not recommended to exceed 0.5 for long, continuous work.

1.11 Motor Loading Calculation

1. Confirm the moving conditions required by the loading mechanism, including acceleration, deceleration, the weight of the mechanism and it's movement.

2. Momentum loading calculation:
   Momentum calculation for loads moving along a straight line

$$J_L = W \times \left(\frac{V}{2 \times \pi \times N \times 10} \right)^2 = W \times \left(\frac{\Delta S}{20 \times \pi} \right)^2$$

J_L : Momentum of load, calculated to the motors axial output (kg.cm^2)
V : Velocity of load along a straight line(mm/min)
ΔS : Displacement of load per motor rotation(mm)
W : Weight of load (kg)
N : Rotational speed of motor[r/min]

3. Select suitable specification of motor with the proportional principle per the momentums between load and motor.

4. Calculate the acceleration and deceleration torques per the momentum of the selected motor combined with the momentum of the load.

Acceleration torque: $$T_a = \frac{(J_L + J_M) \times N}{9.55 \times 10^4 \times T_{psa}}$$

Deceleration torque: $$T_d = \frac{(J_L + J_M) \times N}{9.55 \times 10^4 \times T_{psd}}$$

J_L : Momentum of load, calculated to the motors axial output (kg.cm^2)
J_M : Momentum of motor (kg.cm^2)
N : Rotational speed of motor (r/min)
T_{psa} : Acceleration/deceleration time(s)
T_{psd} : time (s)

5. Per the loads, installation methods, friction coefficients, and motor efficiency, calculate the torque at uniform motion.

$$T_L = \frac{F \times V}{2 \times 10^3 \times \pi \times \eta \times N} = \frac{F \times \Delta S}{2 \times 10^3 \times \pi \times \eta}$$

F : Axial force moving along a straight line
$F = F_C + \mu x (Wxg + F_O)$
T_L : Load torque (N.m)
F_C : External force exerted in the axial direction (N)
F_O : External positive pressure exerted by the load onto the single-axis robot (N)
W : Load (including sliding platform) (kg)
μ : Friction coefficient
η : Mechanical efficiency
V : Velocity of load in a straight line (mm/min)
N : Rotational speed of motor (r/min)
g : Gravity (9.8m/s^2)
ΔS : Displacement of load per motor rotation (mm)

6. The maximum output torque of the selected motor should be larger than the sum of the acceleration torque and load torque; if this condition is not met, the model number needs to be changed and calculated until the requirement is satisfied.

7. Obtain the continuous effective torque per the load torque, acceleration torque, deceleration torque, and continuous torque.

$$T_{RMS} = \sqrt{\frac{T_a^{\,2} \times T_{psa} + T_L^{\,2} \times t_c + T_d^{\,2} \times T_{psd} + T_{LH}^{\,2} \times t_h}{T_f}}$$

T_{psa} : Acceleration time t_c : Constant speed time
T_{psd} : Deceleration time t_h : Stop time
T_f : Cycle time T_a : Acceleration torque
T_L : Load torque T_d : Deceleration torque
T_{LH} : Continuous torque (horizontal movement, T_{LH}=0)

8. The rated output torque of the selected motor should be larger than the continuous effective torque; if this condition is not met, the model number needs to be changed and calculated until the requirement is compliant.

1.12 Installation

If the ballscrew is used in the vertical direction (Z axis), the load should be within the maximum value indicated for vertical loading. Vertical installation using timing belts is forbidden.

＊Attention：To prevent the load from slipping off, a brake system is recommended on the motor when the KA module is installed vertically.

1.13 Belt Tension of Motor Side Mount and Belt Drive Module

Motor Side Mount and Belt Drive Module

To avoid ballscrew damage or belt slippage caused by incorrect belt tension, review table1&2 before installing belt.

Table 1 Belt Tension of Motor Side Mount

Model	Blet Specification	Max. Tension (N)
KA100-FL(R、D)	FR-3GT-90W-309L FL-3GT-90W-216L FD-3GT-90W-237L	44
KA136-FL(R、D)	FL(R)-5GT-90W-350L FD-5GT-90W-300L	55
KA170-FL(R、D)	FL(R)-5GT-150W-420L FD-5GT-150W-320L	96
KA200-FL(R、D)	FL(R)-5GT-150W-460L FD-5GT-150W-360L	96
KS100-FL(R)	FL(R)-3GT-60W-234L	44
KS140-FL(R)	FL(R)-5GT-90W-350L	55
KS180-FL(R)	FL(R)-5GT-90W-400L	55
KC40-FL(R)	2GT-60W-160L	15
KC50-FL(R)	3GT-60W-180L	29
KC60-FL(R)	3GT-60W-186L	29

Table 2 Belt Tension of Belt Drive Module

Model	Blet Specification	Max. Tension (N)
KA-100B	HTD 3M-15W	74
KA-136B	HTD 5M-25W	178
KA-170B	HTD 5M-25W	178
KS-100B	HTD 3M-15W	74
KS-140B	HTD 5M-25W	178
KS-180B	HTD 5M-25W	178

1.14 Service life

For horizontal, side or slope (less than 30 degrees) orientation, the service life is dependent on the guideway, as for vertical orientation, the service life is dependent on the ballscrew or fixed bearing which ever one is shorter.

The listed dynamic load (Fy, Fz, Mx, My, Mz) is based on a service life of 10,000km of travel. If the load is less than the loading condition (Fy/Fyd + Fz/Fzd + Mx/Mxd + My/Myd + Mz/Mzd) ≦ 1), the service life could be extended. If the load is over, the service life will be less than 10,000km. To ensure long term use, it is recommended that the loading be within the listed range.

1.15 Maintenance

All the related accessories, ballscrew and guideway need to be maintained. After every 3 months or 100km travel distance, it is recommended to add grease to the ballscrew and guideway. Clean any dust or debris from the system. Replace the grease if there is any color change. If you have any further questions, please contact HIWIN.

Single-Axis Robot
2. KK Series

The HIWIN KK single-axis robot is driven by a ballscrew while a guideway slides on an optimized U-rail to achieve higher accuracy and greater stiffness.

2.1 Features

◎ An integrated system
◎ Easy installation and maintenance
◎ Compact and lightweight
◎ High accuracy
◎ High stiffness
◎ Complete line of accessories

The structure of rail is analyzed by FEA to get the best rigidity and weight. The analysis results are shown as the right figures.

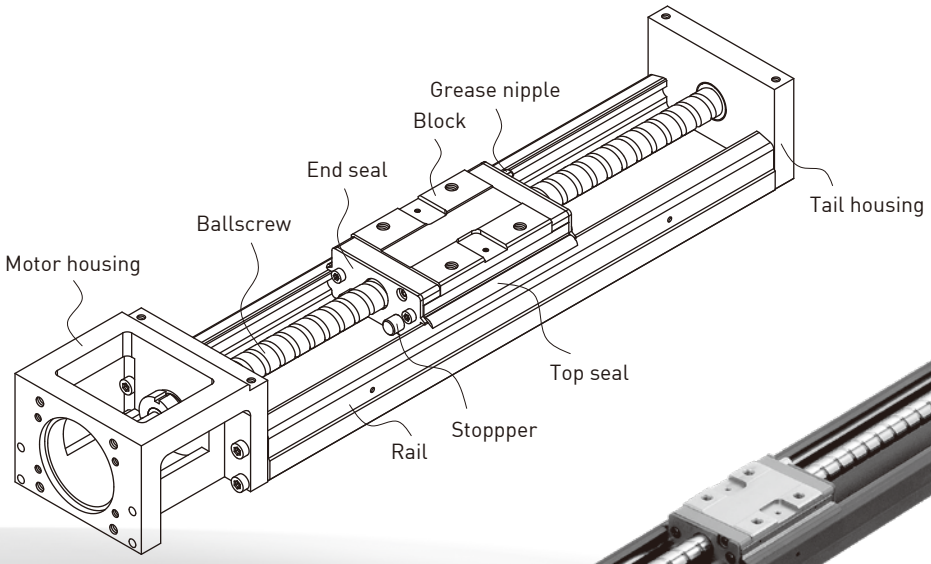

2.1.1 Modulization

The KK single-axis robot integrating a ballscrew and guideway forms a modularized product. The modularized design can help customers save time, cost and system inspection. Therefore, installation efficiency and a space-saving design are also promoted.

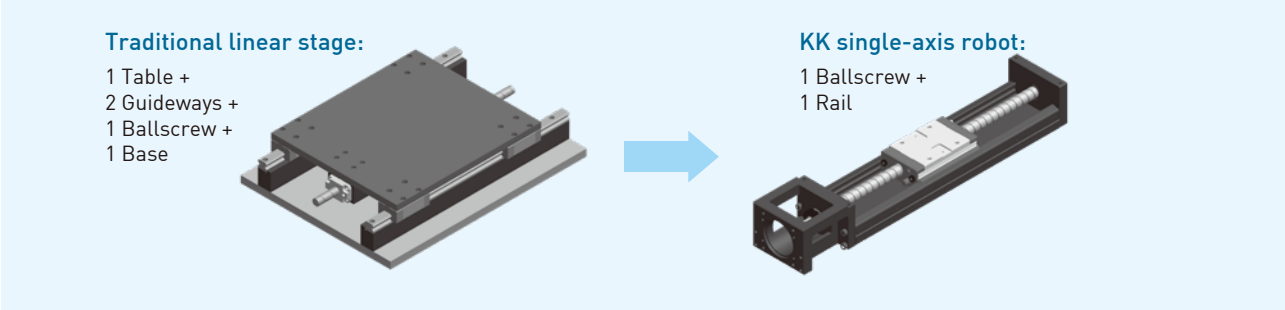

2.1.2 Equivalent Load

The gothic arch contact design sustains load from all directions and offers high rigidity and accuracy.

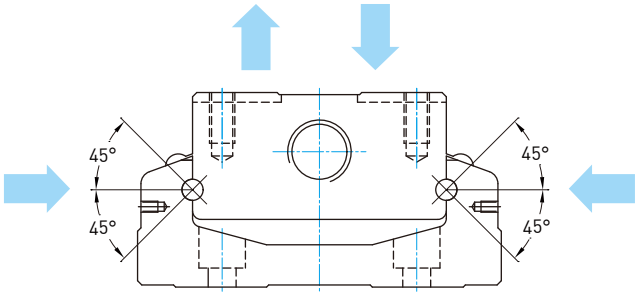

2.1.3 High Stiffness

Using finite element analysis on the U-shaped cross section allows the volume and rigidity to be made balanced, therefore, a high rigidity rail, compact design and a light weight design are also accomplished simultaneously.

Moment of inertia Unit:mm⁴

Model no.	I_X	I_Y
KK30	7.554×10^2	12.726×10^3
KK40	3.533×10^3	5.317×10^4
KK50	9.6×10^3	1.34×10^5
KK60	2.056×10^4	2.802×10^5
KK80	6.711×10^4	8.444×10^5
KK86	7.445×10^4	1.134×10^6
KK100	1.296×10^5	2.035×10^6
KK130	2.546×10^5	5.073×10^6

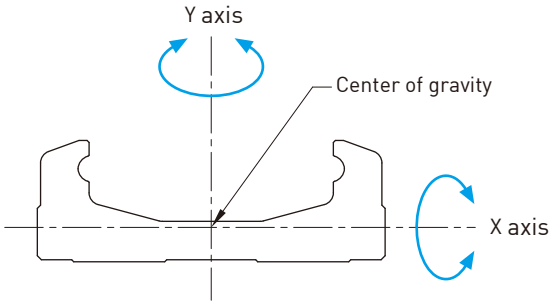

I_X : Moment of inertia computed about X axis
I_Y : Moment of inertia computed about Y axis

2.1.4 Various Specification

KK single-axis robots of various specifications are developed, providing customers with different choices relating to space and loading conditions.

Model no.	W	H
KK30	30	15
KK40	40	20
KK50	50	26
KK60	60	33
KK80	80	45
KK86	86	46
KK100	100	55
KK130	130	65

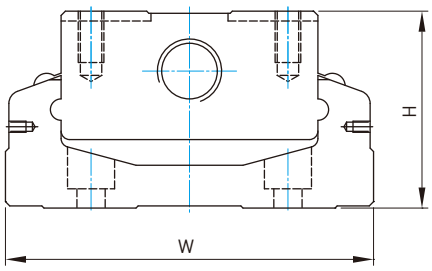

2.2 Accessories

Accessories of KK single-axis robot are also supported for specific demands, such as an aluminum cover, bellows, motor adaptor flange and limit switchs.

◎ Aluminum cover and bellow: contamination protection
◎ Motor adaptor flange: connection for different types of motors
◎ Limit switchs: starting point, positioning and other safety matters

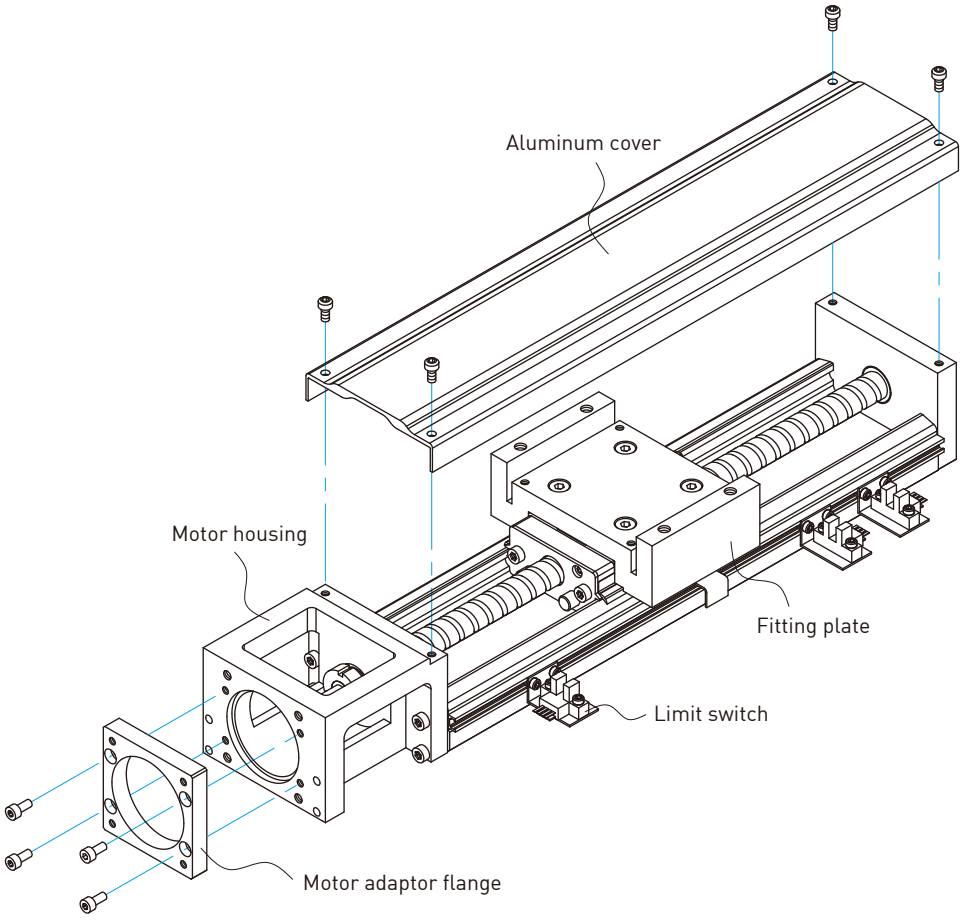

•Cover

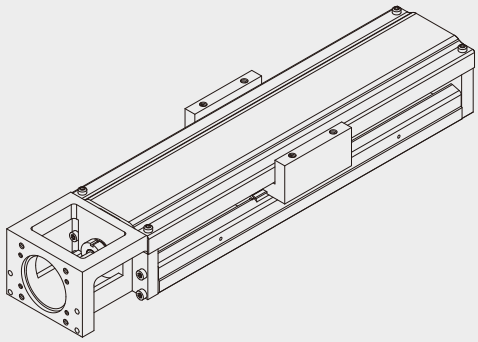

•Bellows

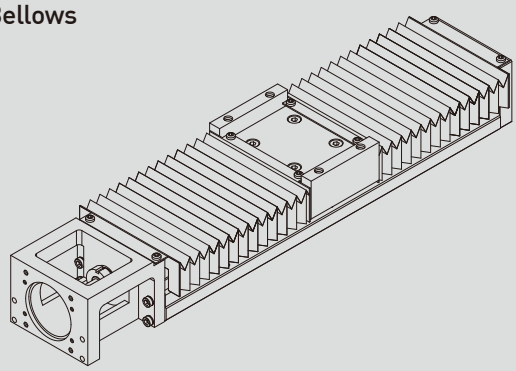

2.3 Model Number of KK Series

KK 60D 10 P E - 400 E A 2 E - F0 C S0 M051

KK Series

Nominal Width:
30, 40, 50, 60,
60D, 80, 86, 86D,
100, 130

Ballscrew Lead:
KK30: 1
KK40: 1
KK50: 2
KK60/KK60D: 5, 10
KK80: 10, 20
KK86/KK86D: 10, 20
KK100: 20
KK130: 25

Accuracy Grade:
P: Precision, C: Normal

E: Ballscrew Special Order
None: Normal Type

Rail Length (mm)
KK30: 75, 100, 125, 150, 175, 200
KK40: 100, 150, 200
KK50: 150, 200, 250, 300
KK60/KK60D: 150, 200, 300, 400, 500, 600
KK80: 340, 440, 540, 640, 740, 940
KK86/KK86D: 340, 440, 540, 640, 740, 940
KK100: 980, 1080, 1180, 1280, 1380
KK130: 980, 1180, 1380, 1680

E: Rail Special Order
None: Normal Type

Motor specification:
ref. catalog P.39-40
M: customer specified
None: Without Motor

Limit Switch: ref. catalog P.47-48
S0: Switch Rail Only
S1: Omron EE-SX671
S2: Omron EE-SX674
S3: Panasonic GX-F12A
S4: Panasonic GX-F12A-P
S5: YAMATAKE APM-D3B1-03
(suitable for KK30)
SE: Sensor Special Order
None: No Limit Switch and
Switch Rail

C: Aluminum Cover
B: Bellows (ref. catalog P.46)
None: Normal Type

Motor Adaptor Flange:
ref. catalog P.41-45
FE：Flange Special Order

E: Block Special Order
None: Normal Type

Number of Blocks: 1, 2

Block Type:
A: Normal
S: Short

2.4 Specifications

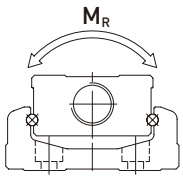

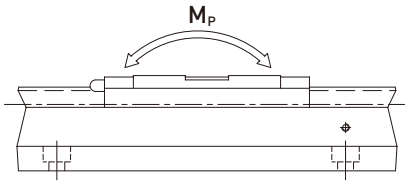

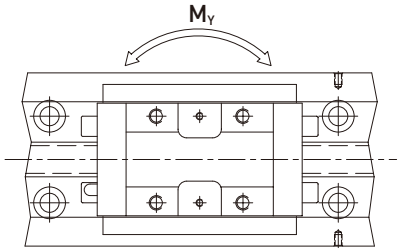

Model No.		Ballscrew				Guideway															
		Nominal Diameter (mm)	Lead (mm)	Basic Dynamic Load (N)	Basic Static Load (N)	Basic Dynamic Load Rating (N)		Basic Static Load Rating (N)		Static Rated Moment											
										Allowable Static Moment M_P (N-m) (pitching)				Allowable Static Moment M_Y (N-m) (yawing)				Allowable Static Moment M_R(N-m) (rolling)			
						Block A	Block S	Block A	Block S	Block A1	Block A2	Block S1	Block S2	Block A1	Block A2	Block S1	Block S2	Block A1	Block A2	Block S1	Block S2
KK3001	Precision	6	1	647	1088	2210	-	3510	-	14	73	-	-	14	73	-	-	41	82	-	-
	Normal			618	1079																
KK4001	Precision	8	1	735	1538	3920	-	6468	-	33	182	-	-	33	182	-	-	81	162	-	-
	Normal			676	1284																
KK5002	Precision	8	2	2136	3489	8007	-	12916	-	116	545	-	-	116	545	-	-	222	444	-	-
	Normal			1813	2910																
KK6005	Precision	12	5	3744	6243	13230	7173	21462	11574	152	760	72	367	152	760	72	367	419	838	241	482
	Normal			3377	5625																
KK6010	Precision	12	10	2410	3743	13230	7173	21462	11574	152	760	72	367	152	760	72	367	419	838	241	482
	Normal			2107	3234																
KK8010	Precision	15	10	7144	12642	31458	21051	50764	29475	622	3050	228	1309	622	3050	228	1309	1433	2866	800	1600
	Normal			6429	11387																
KK8020	Precision	15	20	4645	7655	31458	21051	50764	29475	622	3050	228	1309	622	3050	228	1309	1433	2866	800	1600
	Normal			4175	6889																
KK8610	Precision	15	10	7144	12642	31458	21051	50764	29475	622	3050	228	1309	622	3050	228	1309	1507	3014	847	1694
	Normal			6429	11387																
KK8620	Precision	15	20	4645	7655	31458	21051	50764	29475	622	3050	228	1309	622	3050	228	1309	1507	3014	847	1694
	Normal			4175	6889																
KK10020	Precision	20	20	7046	12544	39200	-	63406	-	960	4763	-	-	960	4763	-	-	2205	4410	-	-
	Normal			4782	9163																
KK13025	Precision	25	25	7897	15931	48101	-	84829	-	1536	7350	-	-	1536	7350	-	-	3885	7770	-	-
	Normal			7092	14352																

2.5 Accuracy Grade

Unit : mm

Model	Rail Length	Repeatability		Accuracy		Running Parallelism		Starting Torque(N-cm)	
		Precision	Normal	Precision	Normal	Precision	Normal	Precision	Normal
KK30	75	±0.003	±0.004	0.020	0.040	0.010	0.020	1.2	0.8
	100								
	125								
	150								
	175								
	200								
KK40	100	±0.003	±0.005	0.020	-	0.010	-	1.2	0.8
	150								
	200								
KK50	150	±0.003	±0.005	0.020	-	0.010	-	4	2
	200								
	250								
	300								
KK60	150	±0.003	±0.005	0.020	-	0.010	-	15	7
	200								
	300								
	400								
	500	±0.003	±0.005	0.025	-	0.015	-	15	7
	600								
KK80	340	±0.003	±0.005	0.025	-	0.015	-	15	10
	440								
	540								
	640								
	740	±0.003	±0.005	0.030	-	0.020	-	17	10
	940	±0.003	±0.005	0.040	-	0.030	-	25	10
KK86	340	±0.003	±0.005	0.025	-	0.015	-	15	10
	440								
	540								
	640								
	740	±0.003	±0.005	0.030	-	0.020	-	17	10
	940	±0.003	±0.005	0.040	-	0.030	-	25	10
KK100	980	±0.005	±0.01	0.035	-	0.025	-	17	12
	1080								
	1180	±0.005	±0.01	0.040	-	0.03	-	20	12
	1280	±0.005	±0.01	0.045	-	0.035	-	23	15
	1380			0.05		0.04		25	
KK130	980	±0.005	±0.01	0.035	-	0.025	-	25	15
	1180			0.04		0.03		25	15
	1380								
	1680	±0.007	±0.012	0.05	-	0.04	-	27	18

2.6 Maximum Speed Limit

Model	Ballscrew Lead (mm)	Rail Length L2 (mm)	Speed (mm/sec)	
			Precision	Normal
KK30	01	75	160	160
		100	160	160
		125	160	160
		150	160	160
		175	160	160
		200	160	160
KK40	01	100	190	190
		150	190	190
		200	190	190
KK50	02	150	270	270
		200	270	270
		250	270	270
		300	270	270
KK60	05	150	550	390
		200	550	390
		300	550	390
		400	550	390
		500	550	390
		600	340	340
	10	150	1100	790
		200	1100	790
		300	1100	790
		400	1100	790
		500	1100	790
		600	670	670
KK80	10	340	740	520
		440	740	520
		540	740	520
		640	740	520
		740	740	520
		940	610	430
	20	340	1480	1050
		440	1480	1050
		540	1480	1050
		640	1480	1050
		740	1480	1050
		940	1220	870
KK86	10	340	740	520
		440	740	520
		540	740	520
		640	740	520
		740	740	520
		940	610	430
	20	340	1480	1050
		440	1480	1050
		540	1480	1050
		640	1480	1050
		740	1480	1050
		940	1220	870
KK100	20	980	1120	800
		1080	980	800
		1180	750	750
		1280	630	630
		1380	530	530
KK130	25	980	1120	800
		1180	1120	800
		1380	830	800
		1680	550	550

2.7 Life Calculations

2.7.1 Service Life

Under repeated stress between the raceway and the rolling elements, pitting and flaking will occur as it reaches fatigue failure. The service life of the KK single-axis robot is defined as the distanced traveled before any failure of the raceway or rolling elements appear.

2.7.2 Nominal Life (L)

The service life varies greatly even when the KK units are manufactured in the same way or operated under the same conditions. For this reason, nominal life is used as the criteria for predicting the service life of a KK unit.

2.7.3 Nominal Life Calculation

The calculating formulas are divided into two parts, guideway and ballscrew. The smaller value of the two would be the recommended nominal life of the KK unit.

Nominal life formulas for both the guideway and ballscrew depend on several parameters and are shown below.

◎ Guideway

$$L = \left(\frac{f_t}{f_w} \cdot \frac{C}{P_n} \right)^3 \text{x } 50 \text{ km}$$

L : Life Rating (km)
f_t : Contact Coefficient (ref. Table 1)
f_w : Loading Coefficient (ref. Table 2)
C : Basic Dynamic Load Rating (N)
P_n : Calculated Loading (N)

Table 1

Block Type	Contact Coefficient f_t
A1, S1	1.0
A2, S2	0.81

Table 2

Operating Condition		Loading Coefficient f_w
Thrust and Vibration	Velocity (V)	
No Thrust	V < 15m/min	1.0 ~ 1.5
Low Vibration	15m/min < V < 60m/min	1.5 ~ 2.0
High Vibration	V > 60m/min	2.0 ~ 3.5

◎ Ballscrew and Bearing

$$L = \left(\frac{1}{f_w} \cdot \frac{C_a}{P_{a,n}} \right)^3 \text{x } 10^6 \text{ rev}$$

L : Life Rating (rev.)
f_w : Loading Coefficient (ref. Table 2)
C_a : Basic Dynamic Load Rating (N)
$P_{a,n}$: Axial Loading (N)

2.8 Lubrication

Insufficient lubrication of the guideway would lead to a reduction of the service life.

The lubricant provides the following functions:

◎ Reducing rolling friction and avoiding abrasion

◎ Providing a lubricating film and extending the service life

◎ Anti-rusting

2.8.1 Lubricating Grease

Re-lubricating the KK single-axis robot every 100km is recommened. Generally, grease is applied for speeds under 60 m/min. For operating speeds over 60 m/min, a grease with a higher viscosity should be used.

$$T = \frac{100 \times 1000}{V_e \times 60}$$

T : Lubricating frequency (hrs)
Ve : Speed (m/min)

2.8.2 Grease Nipple

◎ 1 Block

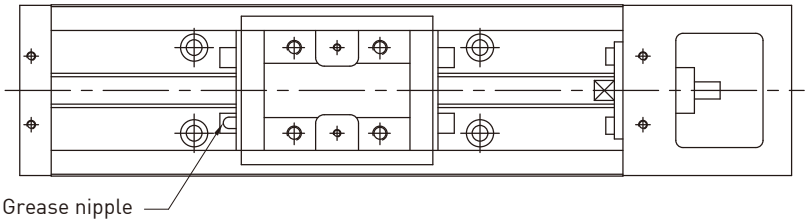

◎ 2 Block

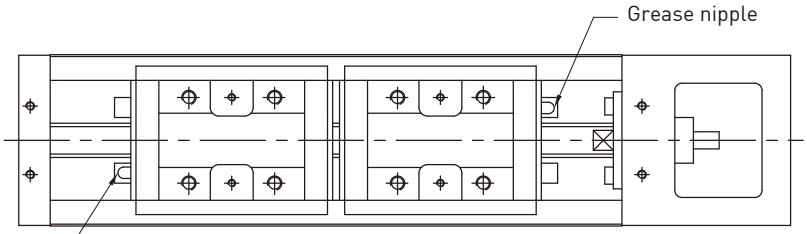

Types of grease nipple

KK40

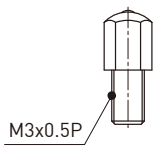

NO. 34310010

KK50
KK60
KK80
KK86

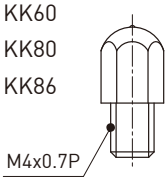

NO. 34310002

KK100
KK130

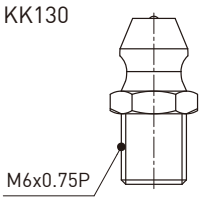

NO. 34310008

2.9 KK Series

2.9.1 Without cover

KK30

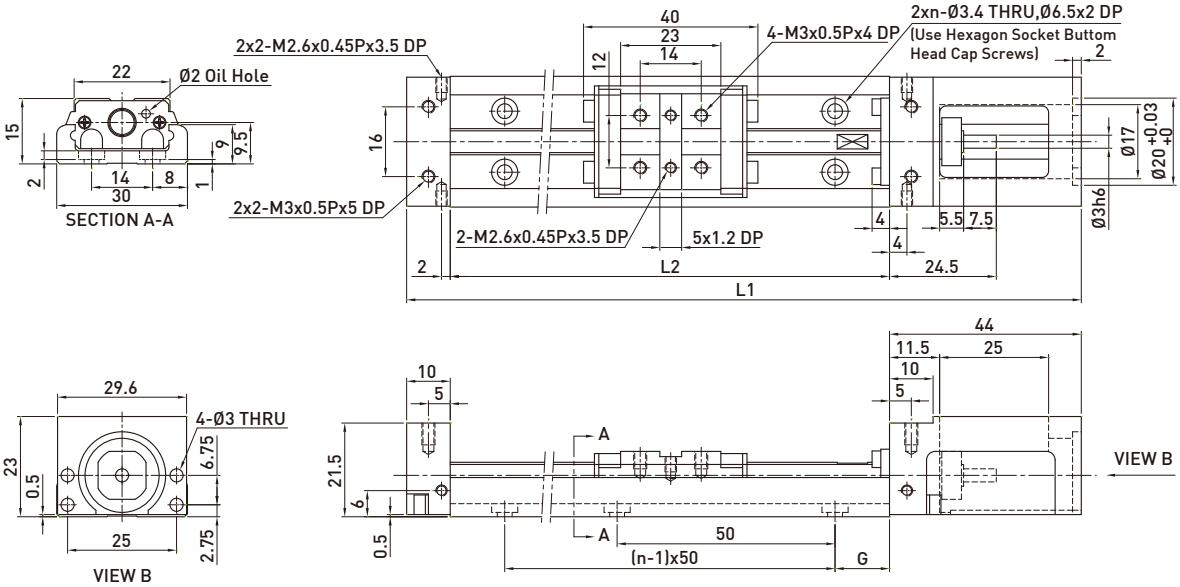

Rail Length L2 (mm)	Total Length L1 (mm)	Maximum Stroke (mm)		G (mm)	n	Mass (kg)	
		A1 Block	A2 Block			A1 Block	A2 Block
75	129	31	-	12.5	2	0.2	-
100	154	56	-	25	2	0.23	-
125	179	81	45	12.5	3	0.26	0.3
150	204	106	70	25	3	0.29	0.33
175	229	131	95	12.5	4	0.32	0.36
200	254	156	120	25	4	0.35	0.39

KK40

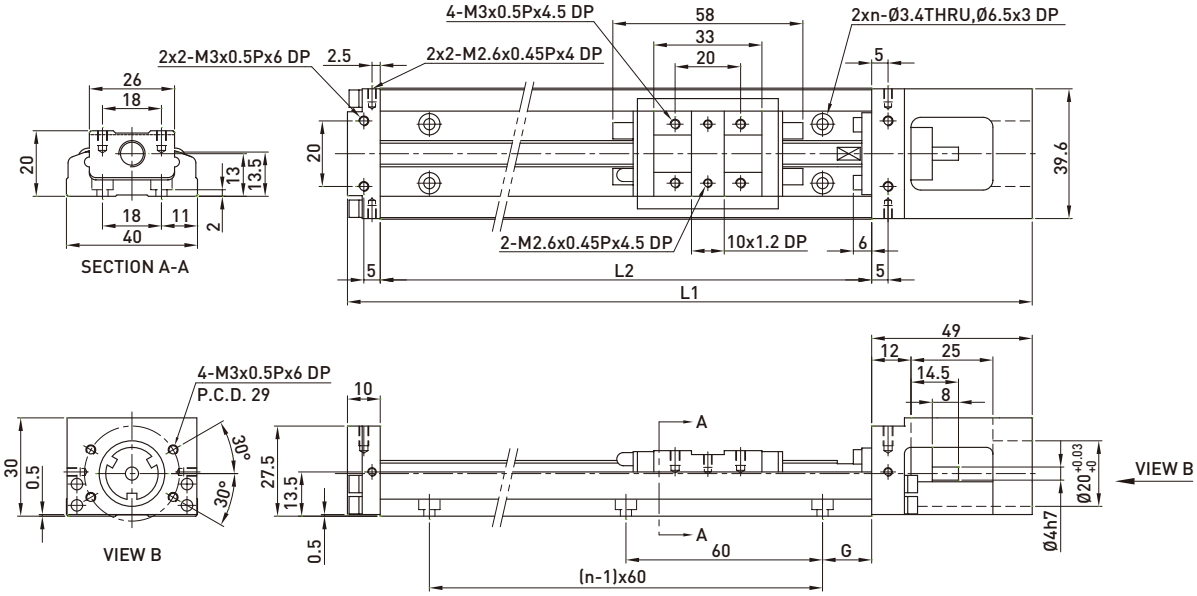

Rail Length L2 (mm)	Total Length L1 (mm)	Maximum Stroke (mm)		G (mm)	n	Mass (kg)	
		A1 Block	A2 Block			A1 Block	A2 Block
100	159	36	-	20	2	0.48	-
150	209	86	34	15	3	0.6	0.67
200	259	136	84	40	3	0.72	0.79

KK50

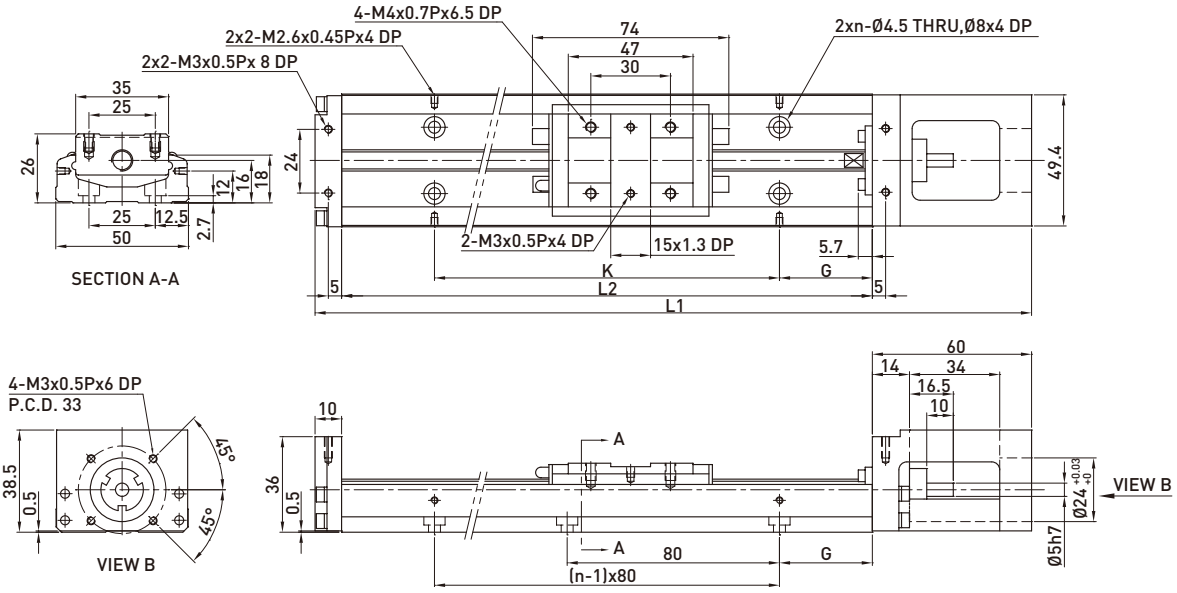

Rail Length L2 (mm)	Total Length L1 (mm)	Maximum Stroke (mm)		G (mm)	K (mm)	n	Mass (kg)	
		A1 Block	A2 Block				A1 Block	A2 Block
150	220	70	-	35	80	2	1	-
200	270	120	55	20	160	3	1.2	1.4
250	320	170	105	45	160	3	1.4	1.6
300	370	220	155	30	240	4	1.6	1.8

KK60 (Standard)

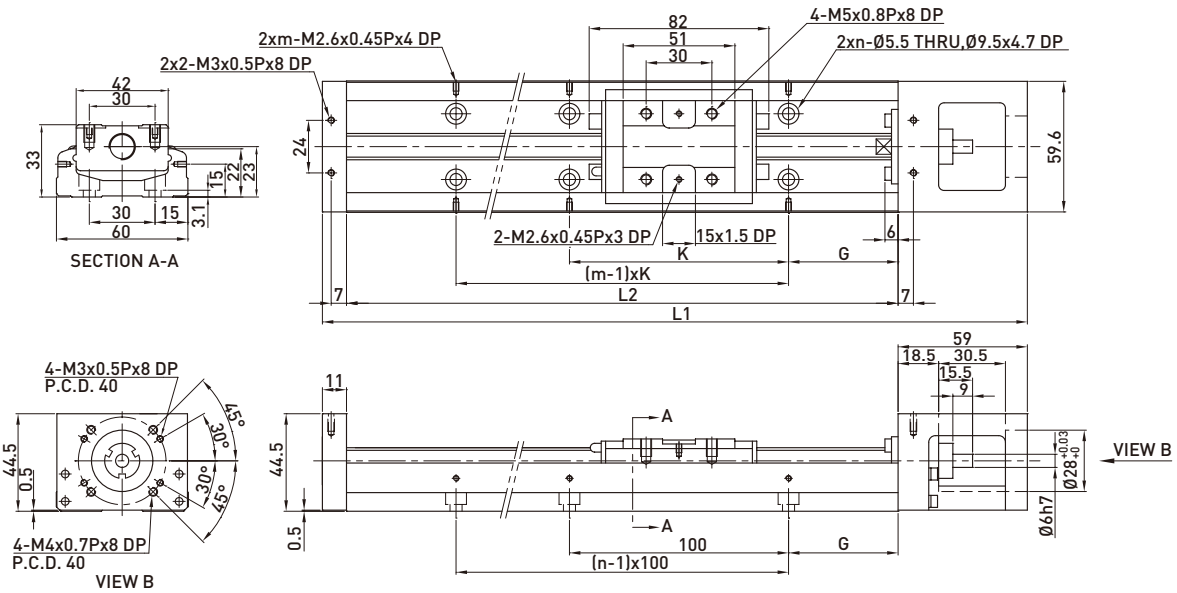

Rail Length L2 (mm)	Total Length L1 (mm)	Maximum Stroke (mm)		G (mm)	K (mm)	n	m	Mass (kg)	
		A1 Block	A2 Block					A1 Block	A2 Block
150	220	60	-	25	100	2	2	1.5	-
200	270	110	-	50	100	2	2	1.8	-
300	370	210	135	50	200	3	2	2.4	2.7
400	470	310	235	50	100	4	4	3	3.3
500	570	410	335	50	200	5	3	3.6	3.9
600	670	510	435	50	100	6	6	4.2	4.6

KK60 (Light Duty)

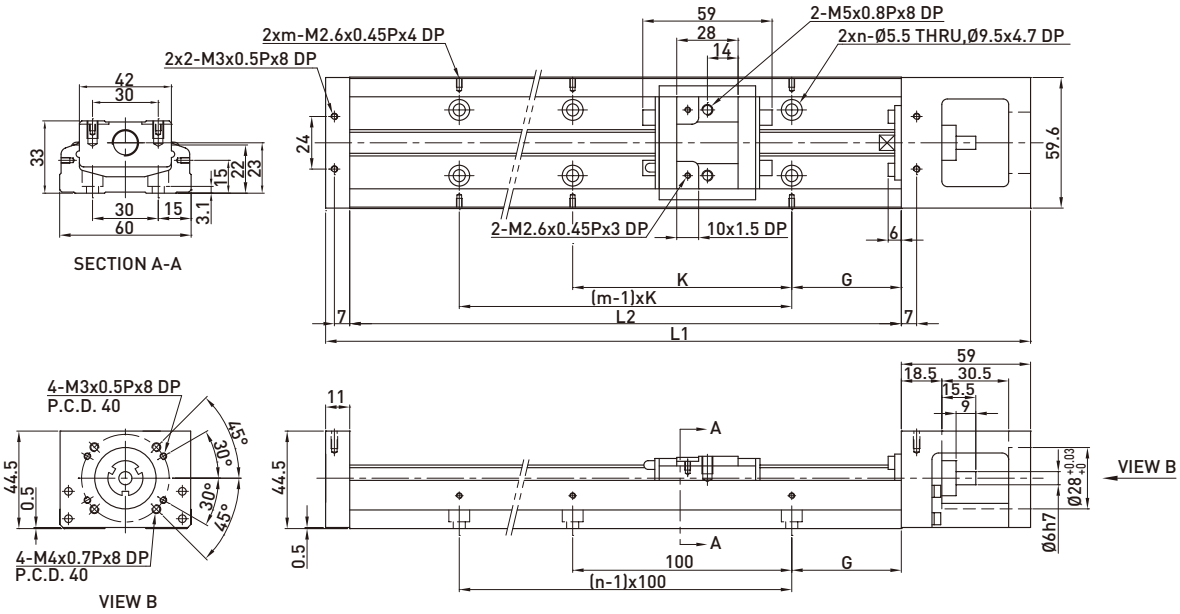

Rail Length L2 (mm)	Total Length L1 (mm)	Maximum Stroke (mm)		G (mm)	K (mm)	n	m	Mass (kg)	
		S1 Block	S2 Block					S1 Block	S2 Block
150	220	85	34	25	100	2	2	1.4	1.6
200	270	135	84	50	100	2	2	1.7	1.9
300	370	235	184	50	200	3	2	2.3	2.5
400	470	335	284	50	100	4	4	2.9	3.1
500	570	435	384	50	200	5	3	3.5	3.7
600	670	535	484	50	100	6	6	4.1	4.3

KK60D (Standard)

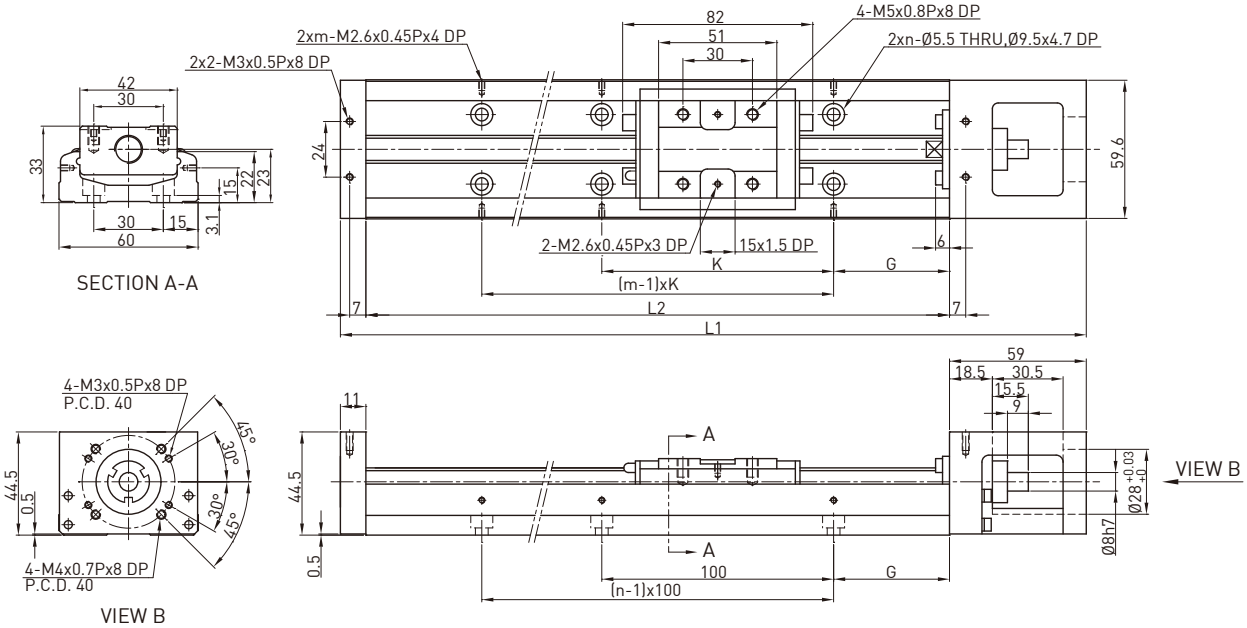

Rail Length L2 (mm)	Total Length L1 (mm)	Maximum Stroke (mm)		G (mm)	K (mm)	n	m	Mass (kg)	
		A1 Block	A2 Block					A1 Block	A2 Block
150	220	60	-	25	100	2	2	1.5	-
200	270	110	-	50	100	2	2	1.8	-
300	370	210	135	50	200	3	2	2.4	2.7
400	470	310	235	50	100	4	4	3	3.3
500	570	410	335	50	200	5	3	3.6	3.9
600	670	510	435	50	100	6	6	4.2	4.6

KK60D (Light Duty)

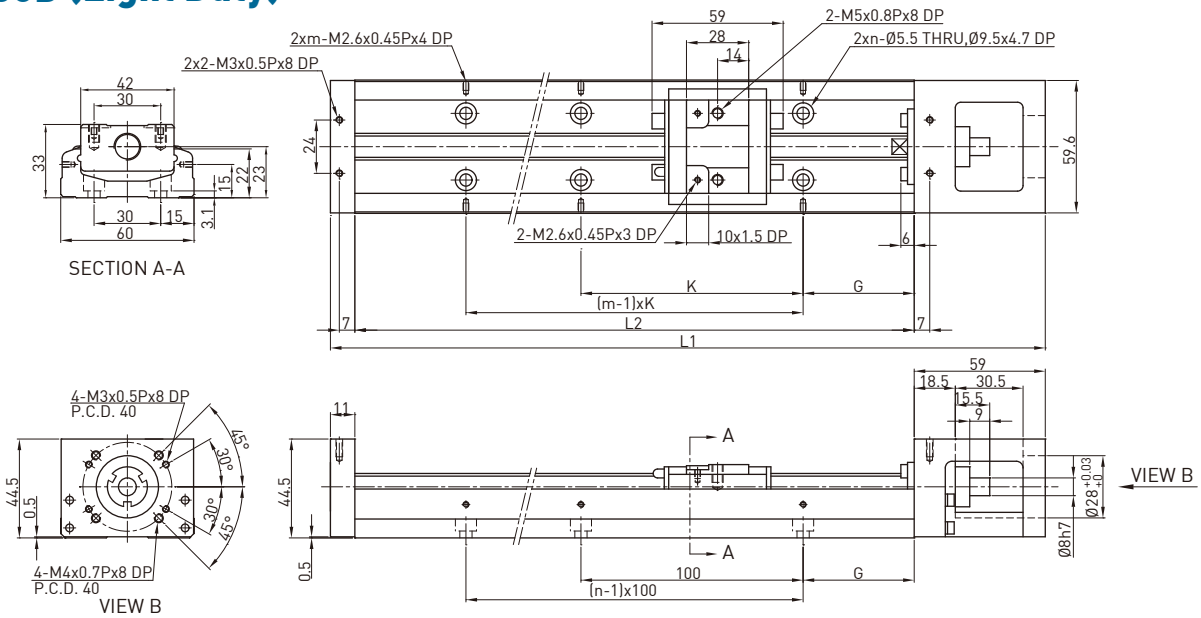

Rail Length L2 (mm)	Total Length L1 (mm)	Maximum Stroke (mm)		G (mm)	K (mm)	n	m	Mass (kg)	
		S1 Block	S2 Block					S1 Block	S2 Block
150	220	85	34	25	100	2	2	1.4	1.6
200	270	135	84	50	100	2	2	1.7	1.9
300	370	235	184	50	200	3	2	2.3	2.5
400	470	335	284	50	100	4	4	2.9	3.1
500	570	435	384	50	200	5	3	3.5	3.7
600	670	535	484	50	100	6	6	4.1	4.3

KK80 (Standard)

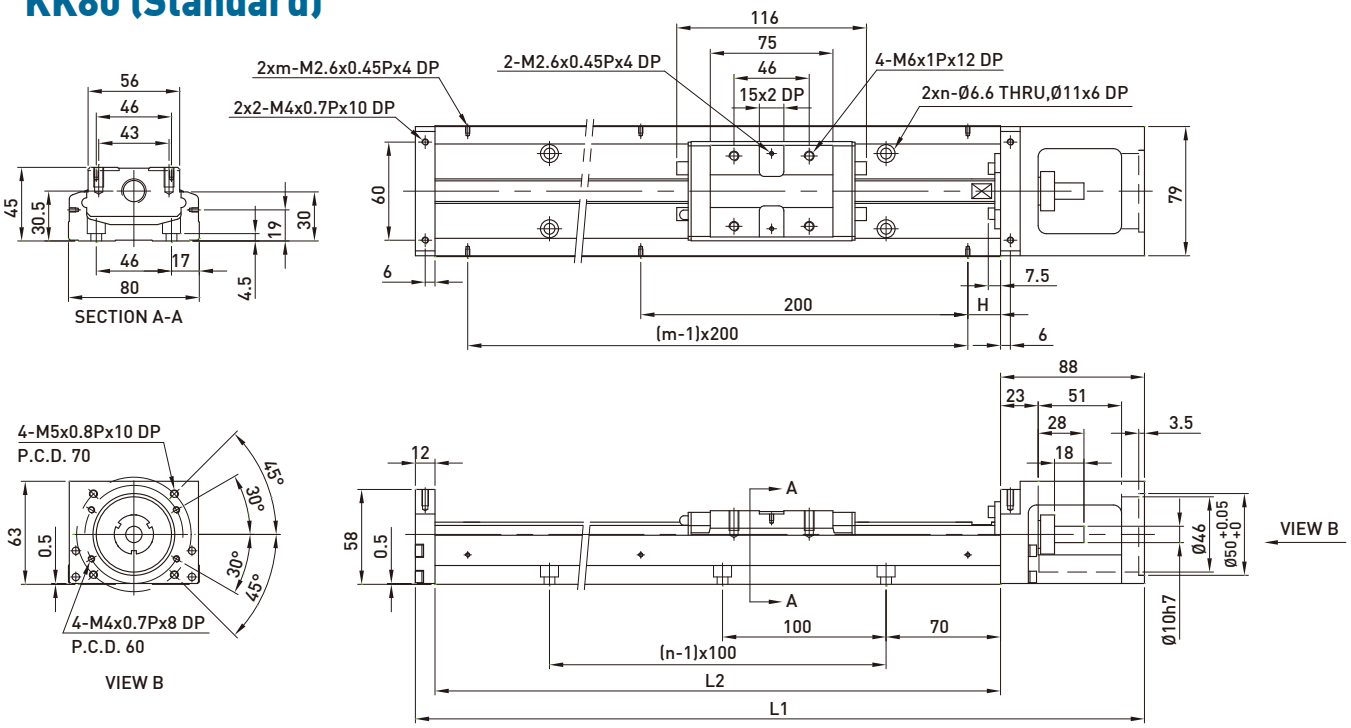

Rail Length L2 (mm)	Total Length L1 (mm)	Maximum Stroke (mm)		H (mm)	n	m	Mass (kg)	
		A1 Block	A2 Block				A1 Block	A2 Block
340	440	216.5	108.5	70	3	2	5.3	6
440	540	316.5	208.5	20	4	3	6.5	7.2
540	640	416.5	308.5	70	5	3	7.6	8.3
640	740	516.5	408.5	20	6	4	8.8	9.5
740	840	616.5	508.5	70	7	4	10	10.7
940	1040	816.5	708.5	70	9	5	12.4	13.1

KK80 (Light Duty)

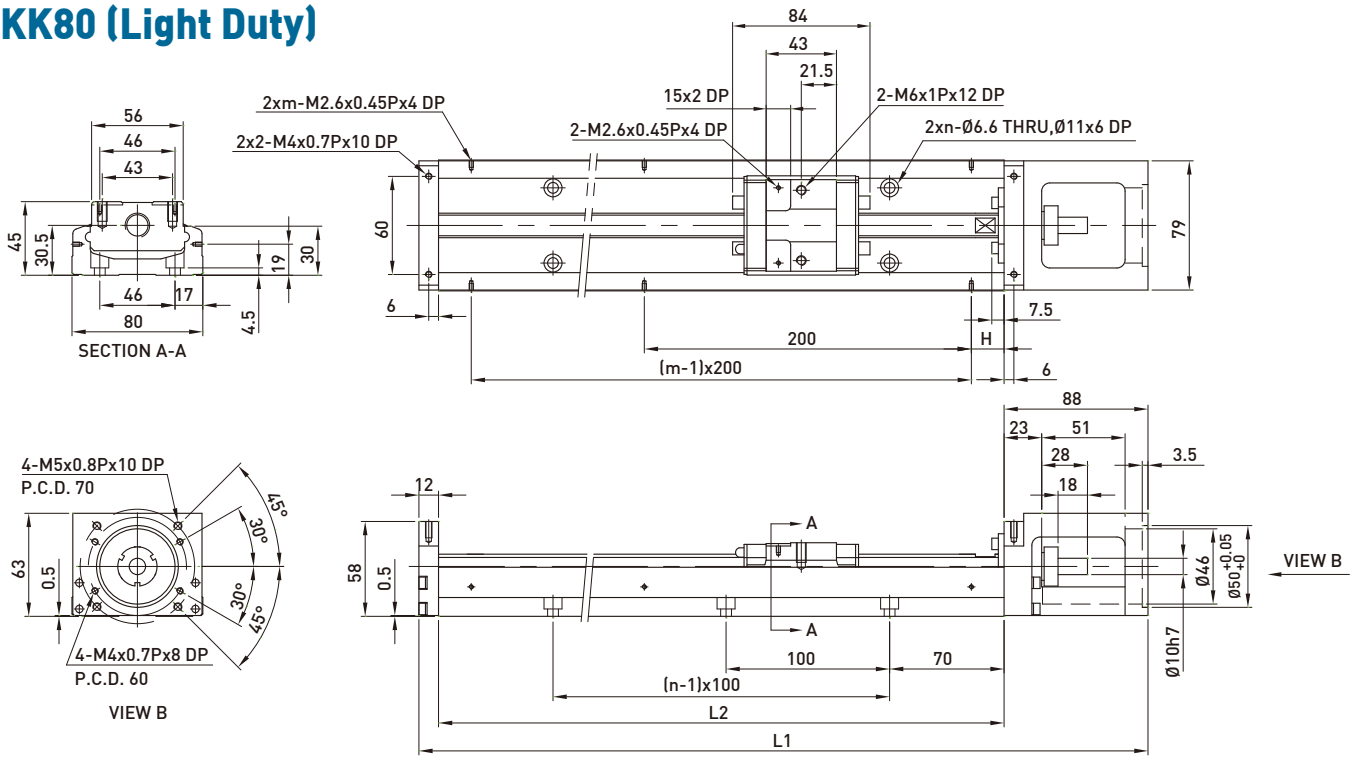

Rail Length L2 (mm)	Total Length L1 (mm)	Maximum Stroke (mm)		H (mm)	n	m	Mass (kg)	
		S1 Block	S2 Block				S1 Block	S2 Block
340	440	248.5	172.5	70	3	2	5	5.4
440	540	348.5	272.5	20	4	3	6.2	6.6
540	640	448.5	372.5	70	5	3	7.3	7.7
640	740	548.5	472.5	20	6	4	8.5	8.9
740	840	648.5	572.5	70	7	4	9.7	10.1
940	1040	848.5	772.5	70	9	5	12.1	12.5

KK86 (Standard)

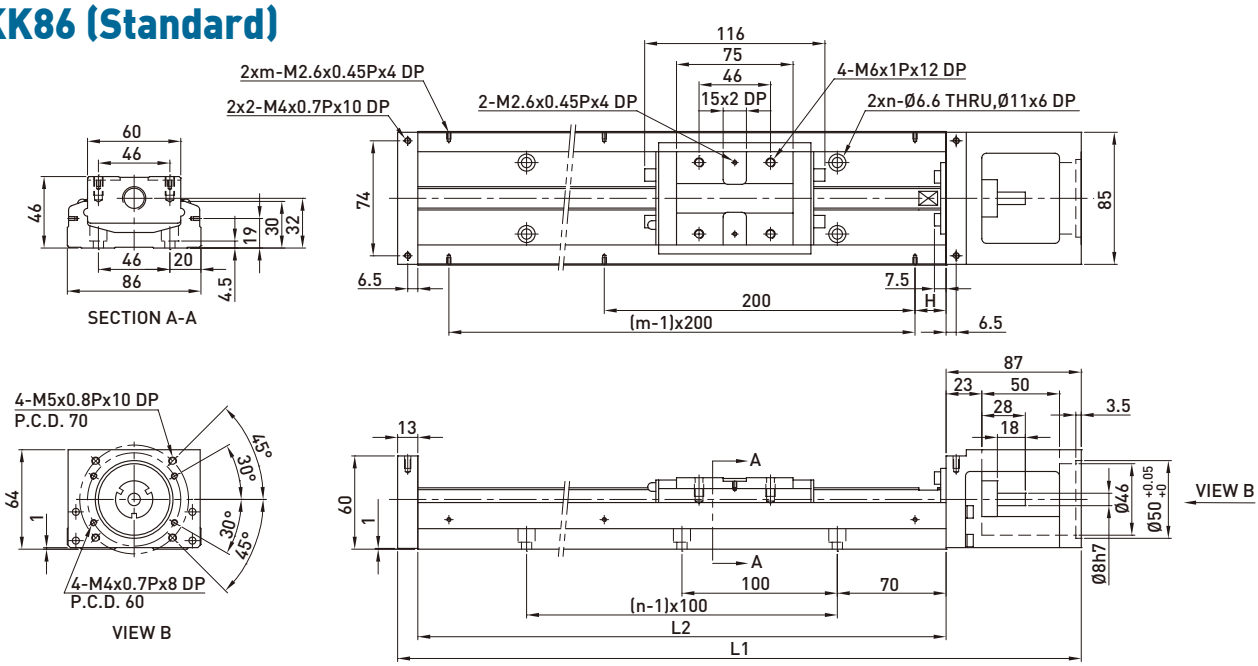

Rail Length L2 (mm)	Total Length L1 (mm)	Maximum Stroke (mm)		H (mm)	n	m	Mass (kg)	
		A1 Block	A2 Block				A1 Block	A2 Block
340	440	216.5	108.5	70	3	2	5.7	6.5
440	540	316.5	208.5	20	4	3	6.9	7.7
540	640	416.5	308.5	70	5	3	8.0	8.8
640	740	516.5	408.5	20	6	4	9.2	10.0
740	840	616.5	508.5	70	7	4	10.4	11.2
940	1040	816.5	708.5	70	9	5	11.6	12.4

KK86 (Light Duty)

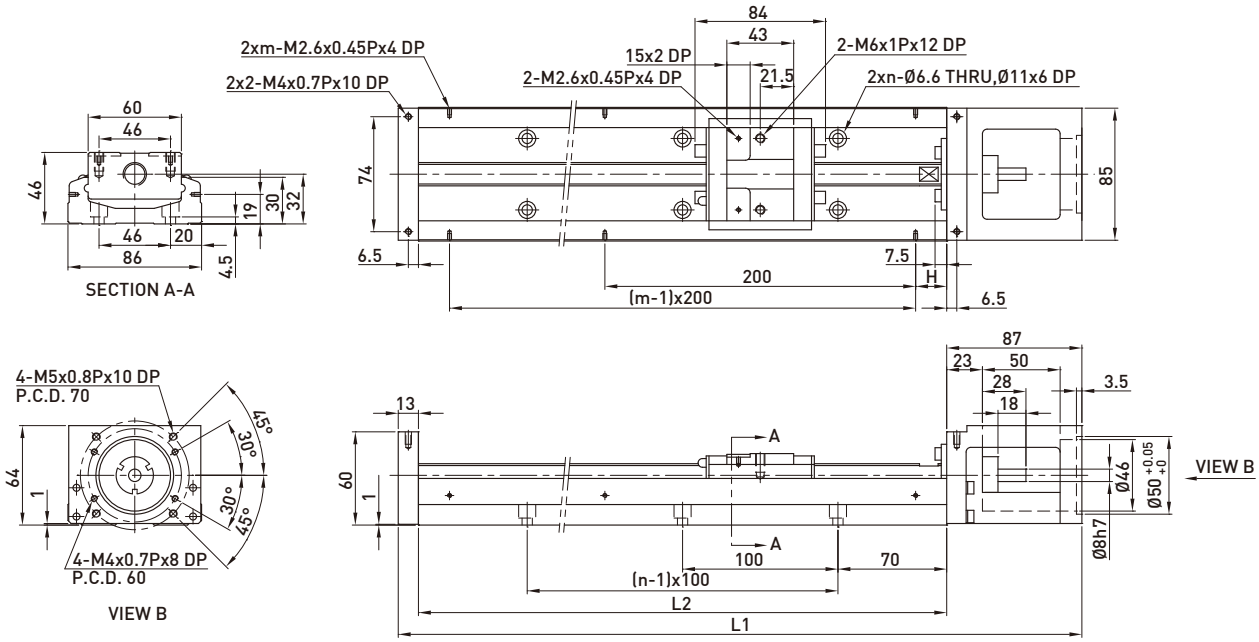

Rail Length L2 (mm)	Total Length L1 (mm)	Maximum Stroke (mm)		H (mm)	n	m	Mass (kg)	
		S1 Block	S2 Block				S1 Block	S2 Block
340	440	248.5	172.5	70	3	2	5.4	5.9
440	540	348.5	272.5	20	4	3	6.6	7.1
540	640	448.5	372.5	70	5	3	7.7	8.2
640	740	548.5	472.5	20	6	4	8.9	9.4
740	840	648.5	572.5	70	7	4	10.1	10.6
940	1040	848.5	772.5	70	9	5	11.3	11.8

KK86D (Standard)

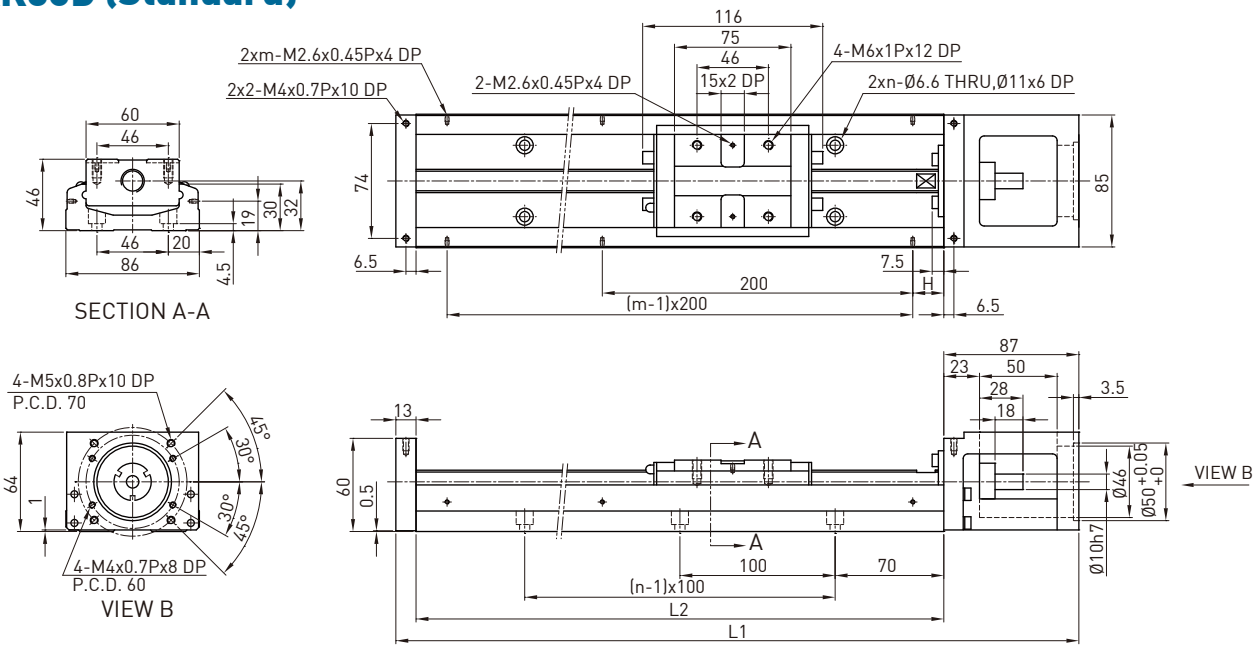

Rail Length L2 (mm)	Total Length L1 (mm)	Maximum Stroke (mm)		H (mm)	n	m	Mass (kg)	
		A1 Block	A2 Block				A1 Block	A2 Block
340	440	216.5	108.5	70	3	2	5.7	6.5
440	540	316.5	208.5	20	4	3	6.9	7.7
540	640	416.5	308.5	70	5	3	8.0	8.8
640	740	516.5	408.5	20	6	4	9.2	10.0
740	840	616.5	508.5	70	7	4	10.4	11.2
940	1040	816.5	708.5	70	9	5	11.6	12.4

KK86D (Light Duty)

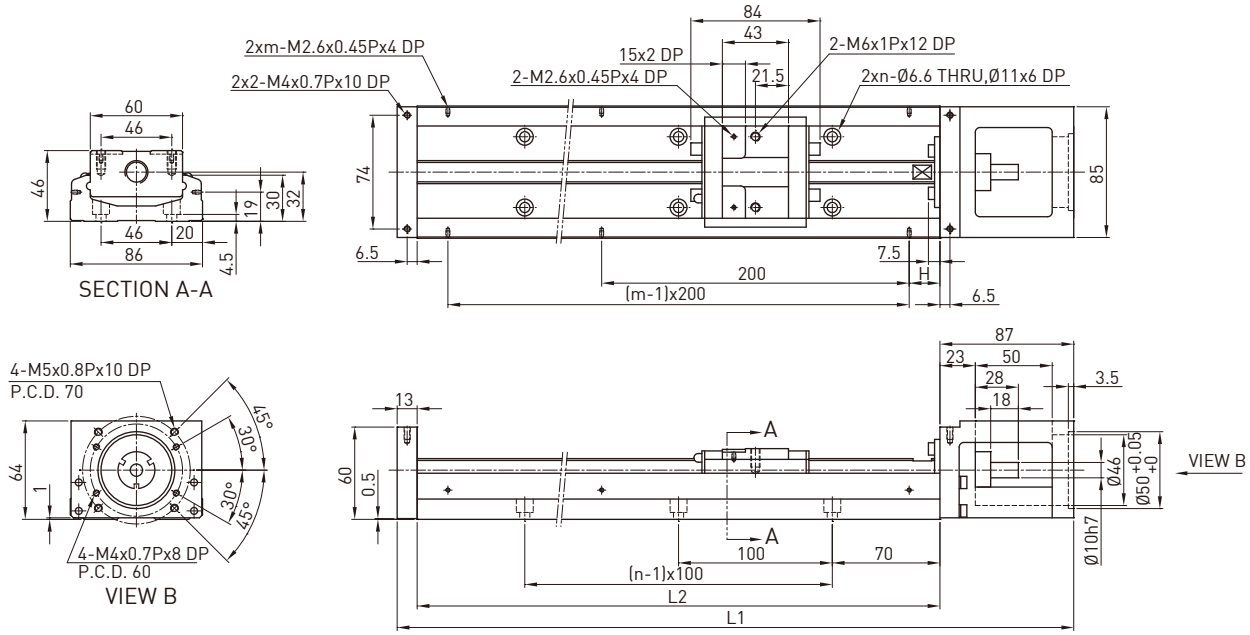

Rail Length L2 (mm)	Total Length L1 (mm)	Maximum Stroke (mm)		H (mm)	n	m	Mass (kg)	
		S1 Block	S2 Block				S1 Block	S2 Block
340	440	248.5	172.5	70	3	2	5.4	5.9
440	540	348.5	272.5	20	4	3	6.6	7.1
540	640	448.5	372.5	70	5	3	7.7	8.2
640	740	548.5	472.5	20	6	4	8.9	9.4
740	840	648.5	572.5	70	7	4	10.1	10.6
940	1040	848.5	772.5	70	9	5	11.3	11.8

KK100

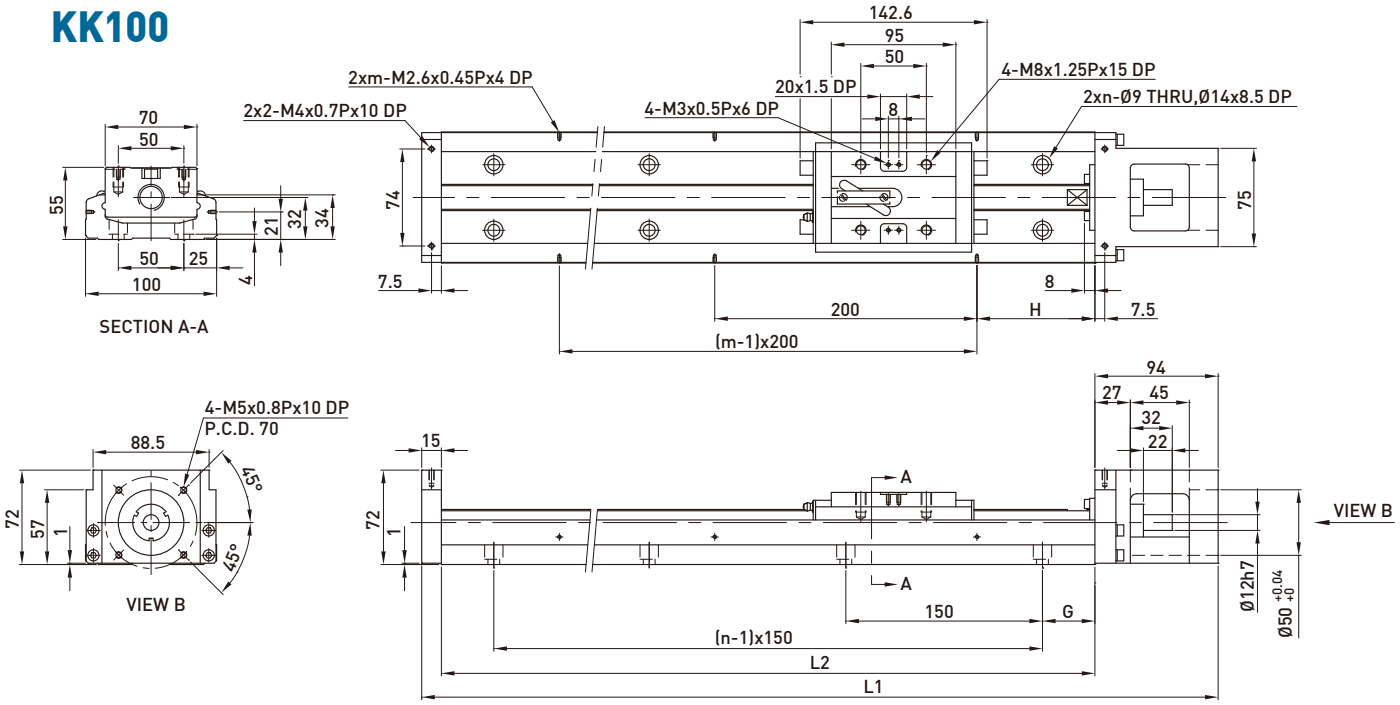

Rail Length L2 (mm)	Total Length L1 (mm)	Maximum Stroke (mm)		G (mm)	H (mm)	n	m	Mass (kg)	
		A1 Block	A2 Block					A1 Block	A2 Block
980	1089	828	700	40	90	7	5	18.6	20.3
1080	1189	928	800	15	40	8	6	20.3	22.0
1180	1289	1028	900	65	90	8	6	22.0	23.7
1280	1389	1128	1000	40	40	9	7	23.6	25.3
1380	1489	1228	1100	15	90	10	7	25.3	27.0

KK130

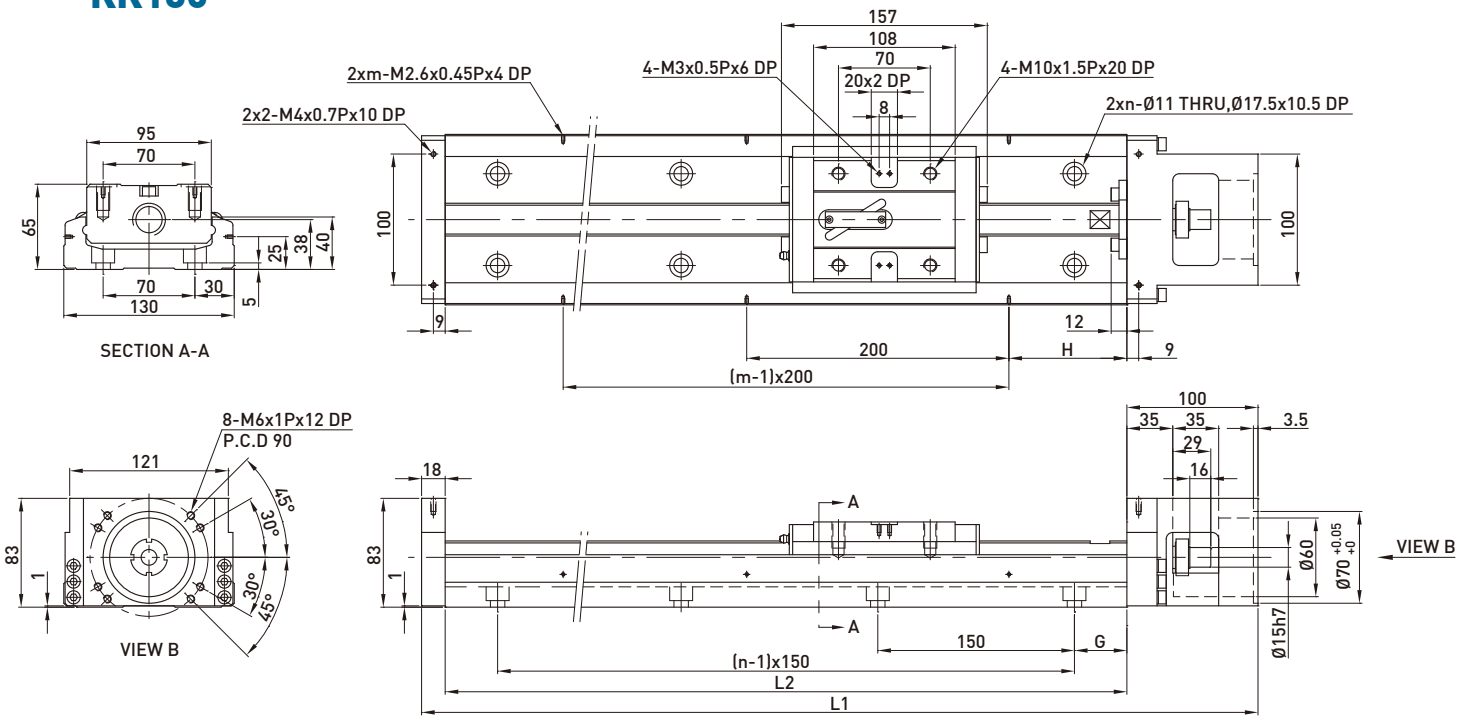

Rail Length L2 (mm)	Total Length L1 (mm)	Maximum Stroke (mm)		G (mm)	H (mm)	n	m	Mass (kg)	
		A1 Block	A2 Block					A1 Block	A2 Block
980	1098	811	659	40	90	7	5	29.4	32.3
1180	1298	1011	859	65	90	8	6	34.3	37.2
1380	1498	1211	1059	90	90	9	7	39.2	42.1
1680	1798	1511	1359	90	40	11	9	46.5	49.4

2.9.2 With cover

KK30

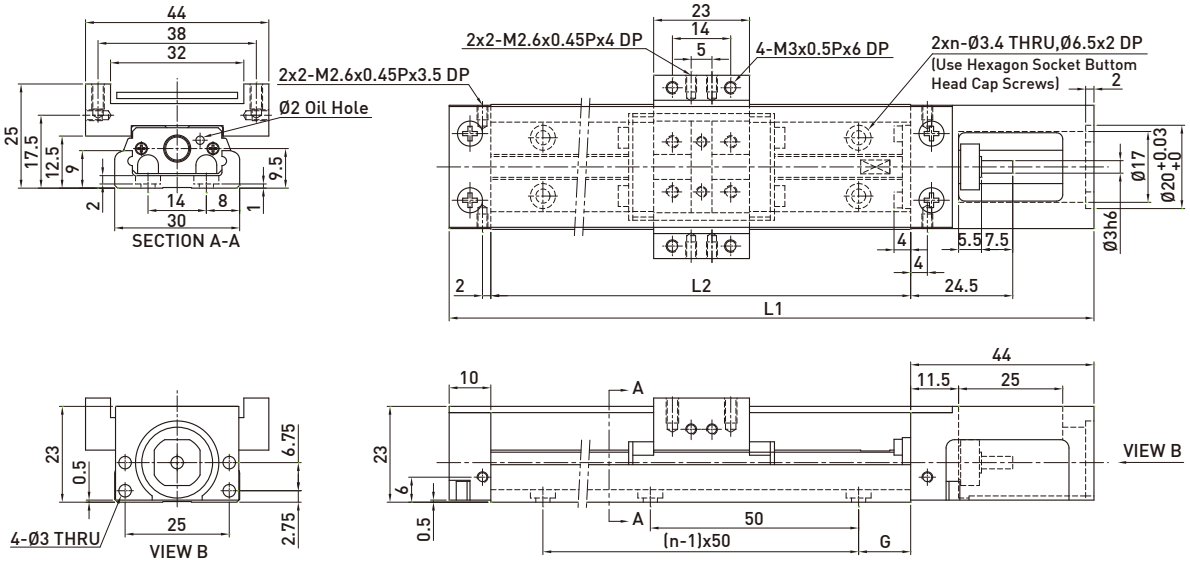

Rail Length L2 (mm)	Total Length L1 (mm)	Maximum Stroke (mm)		G (mm)	n	Mass (kg)	
		A1 Block	A2 Block			A1 Block	A2 Block
75	129	31	-	12.5	2	0.24	-
100	154	56	-	25	2	0.27	-
125	179	81	45	12.5	3	0.3	0.36
150	204	106	70	25	3	0.33	0.39
175	229	131	95	12.5	4	0.37	0.43
200	254	156	120	25	4	0.4	0.46

KK40

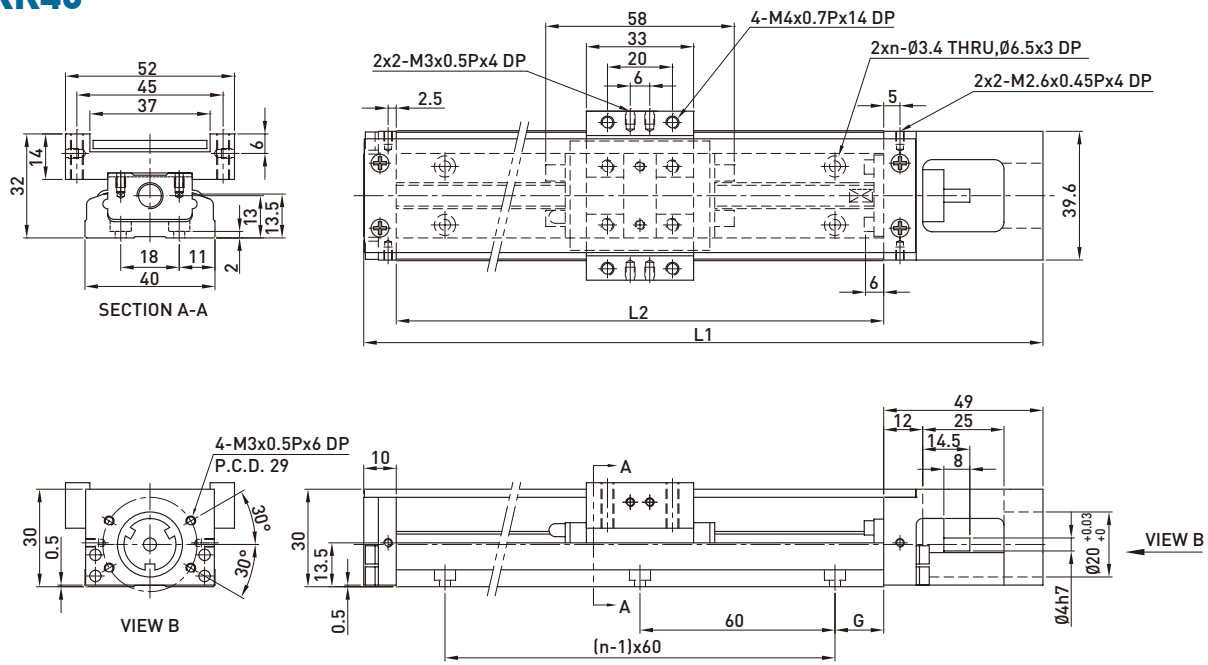

Rail Length L2 (mm)	Total Length L1 (mm)	Maximum Stroke (mm)		G (mm)	n	Mass (kg)	
		A1 Block	A2 Block			A1 Block	A2 Block
100	159	36	-	20	2	0.55	-
150	209	86	34	15	3	0.68	0.76
200	259	136	84	40	3	0.82	0.89

KK50

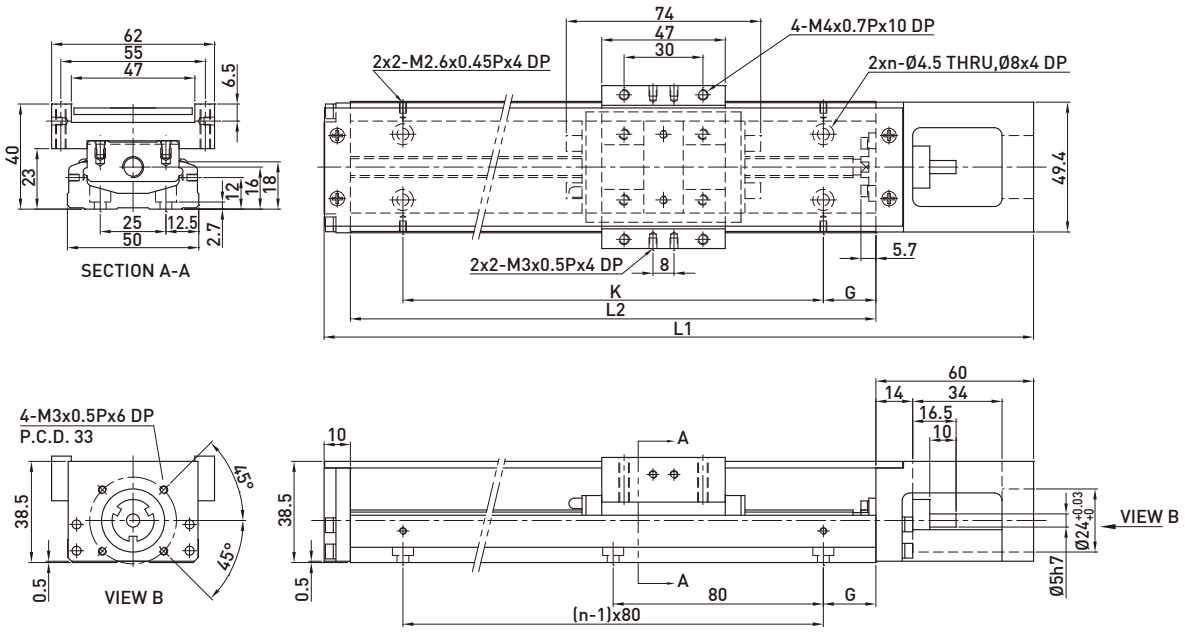

Rail Length L2 (mm)	Total Length L1 (mm)	Maximum Stroke (mm)		G (mm)	K (mm)	n	Mass (kg)	
		A1 Block	A2 Block				A1 Block	A2 Block
150	220	70	-	35	80	2	1.1	-
200	270	120	55	20	160	3	1.3	1.5
250	320	170	105	45	160	3	1.6	1.8
300	370	220	155	30	240	4	1.8	2.0

KK60 (Standard)

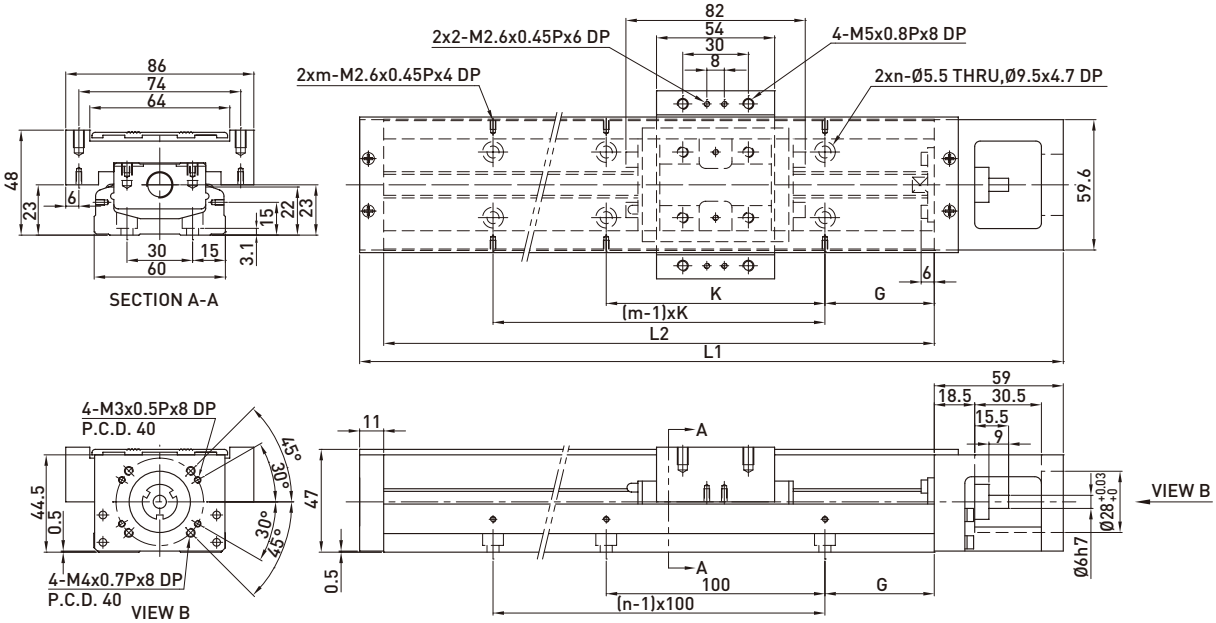

Rail Length L2 (mm)	Total Length L1 (mm)	Maximum Stroke (mm)		G (mm)	K (mm)	n	m	Mass (kg)	
		A1 Block	A2 Block					A1 Block	A2 Block
150	220	60	-	25	100	2	2	1.7	-
200	270	110	-	50	100	2	2	2.1	-
300	370	210	135	50	200	3	2	2.7	3.0
400	470	310	235	50	100	4	4	3.3	3.6
500	570	410	335	50	200	5	3	3.9	4.2
600	670	510	435	50	100	6	6	4.6	5.0

KK60 (Light Duty)

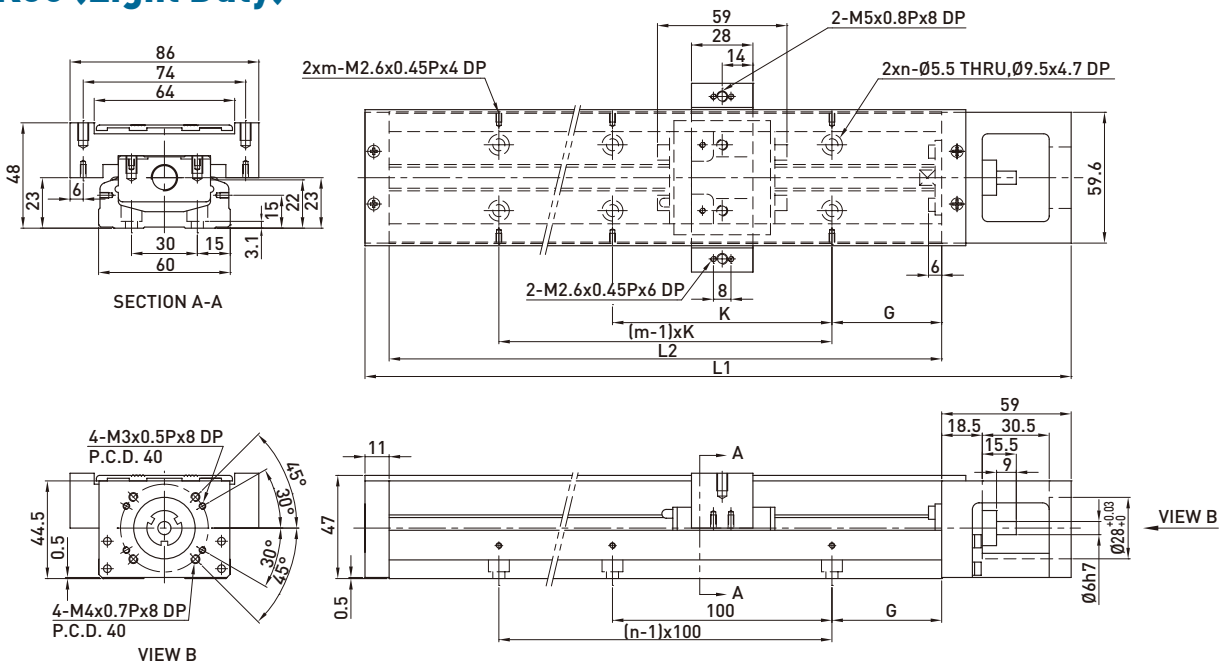

Rail Length L2 (mm)	Total Length L1 (mm)	Maximum Stroke (mm)		G (mm)	K (mm)	n	m	Mass (kg)	
		S1 Block	S2 Block					S1 Block	S2 Block
150	220	85	34	25	100	2	2	1.6	1.8
200	270	135	84	50	100	2	2	1.9	2.1
300	370	235	184	50	200	3	2	2.5	2.7
400	470	335	284	50	100	4	4	3.1	3.3
500	570	435	384	50	200	5	3	3.7	3.9
600	670	535	484	50	100	6	6	4.4	4.6

KK60D (Standard)

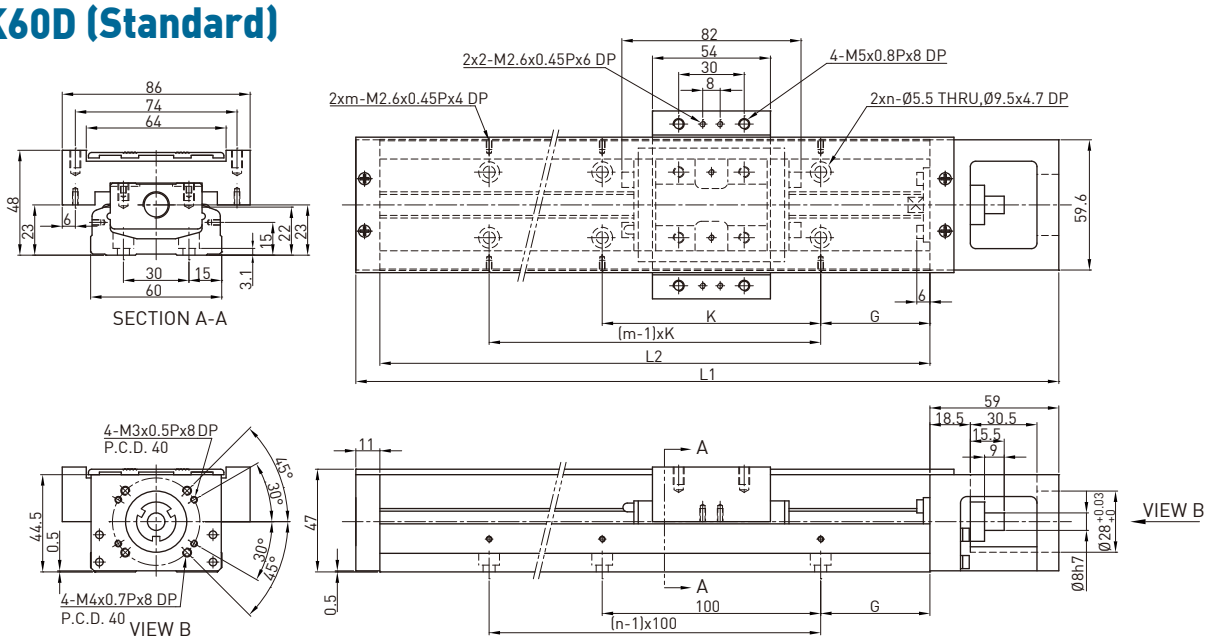

Rail Length L2 (mm)	Total Length L1 (mm)	Maximum Stroke (mm)		G (mm)	K (mm)	n	m	Mass (kg)	
		A1 Block	A2 Block					A1 Block	A2 Block
150	220	60	-	25	100	2	2	1.7	-
200	270	110	-	50	100	2	2	2.1	-
300	370	210	135	50	200	3	2	2.7	3.0
400	470	310	235	50	100	4	4	3.3	3.6
500	570	410	335	50	200	5	3	3.9	4.2
600	670	510	435	50	100	6	6	4.6	5.0

KK60D (Light Duty)

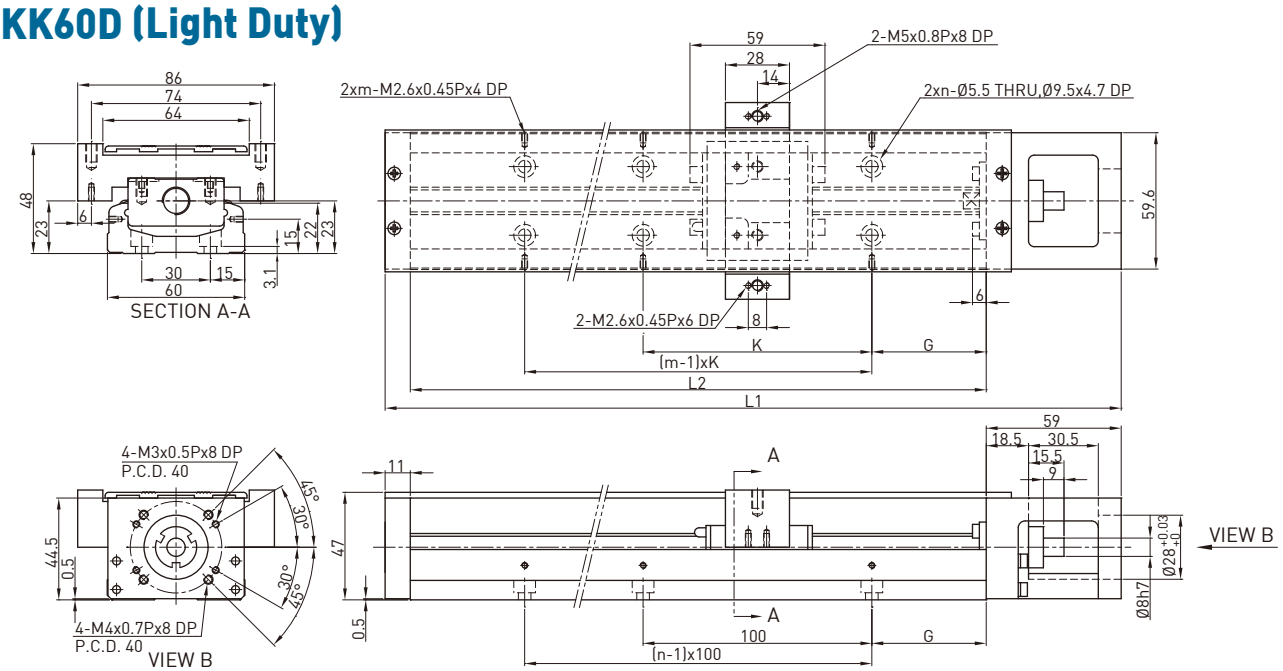

Rail Length L2 (mm)	Total Length L1 (mm)	Maximum Stroke (mm)		G (mm)	K (mm)	n	m	Mass (kg)	
		S1 Block	S2 Block					S1 Block	S2 Block
150	220	85	34	25	100	2	2	1.6	1.8
200	270	135	84	50	100	2	2	1.9	2.1
300	370	235	184	50	200	3	2	2.5	2.7
400	470	335	284	50	100	4	4	3.1	3.3
500	570	435	384	50	200	5	3	3.7	3.9
600	670	535	484	50	100	6	6	4.4	4.6

KK80 (Standard)

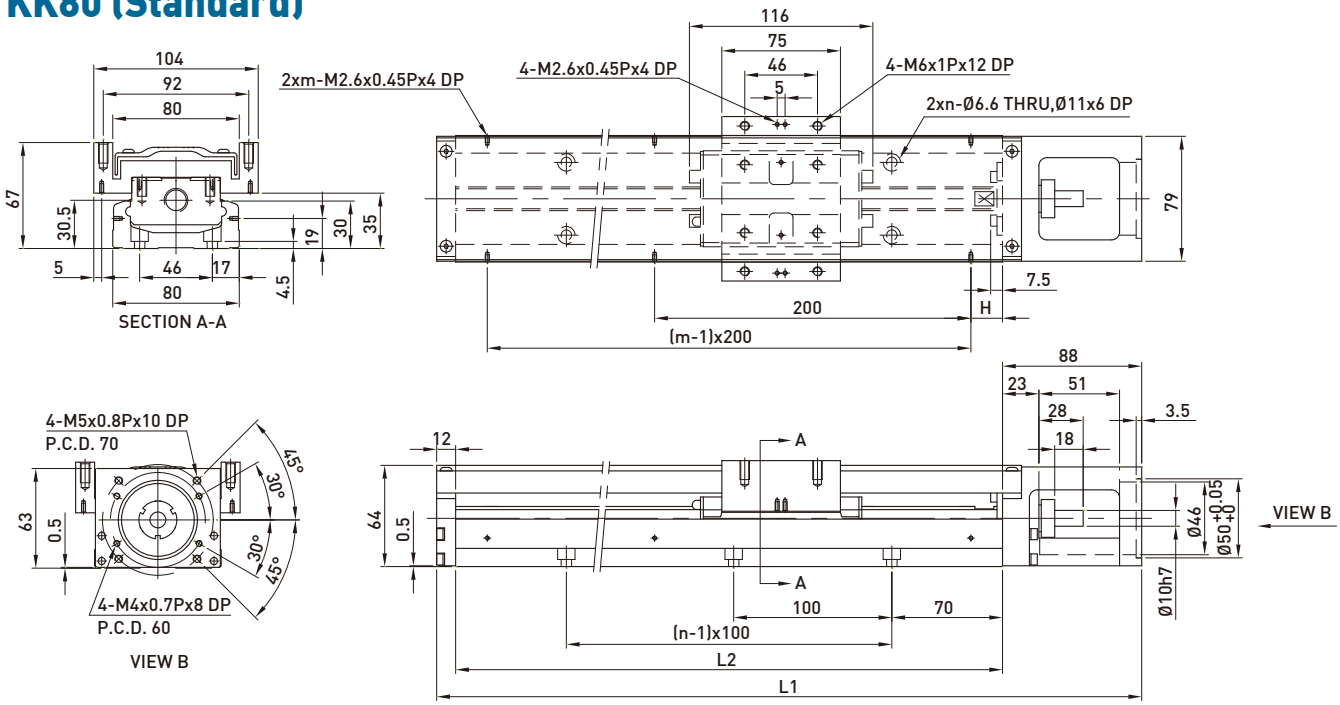

Rail Length L2 (mm)	Total Length L1 (mm)	Maximum Stroke (mm)		H (mm)	n	m	Mass (kg)	
		A1 Block	A2 Block				A1 Block	A2 Block
340	440	216.5	108.5	70	3	2	6	7.1
440	540	316.5	208.5	20	4	3	7.2	8.3
540	640	416.5	308.5	70	5	3	8.4	9.5
640	740	516.5	408.5	20	6	4	9.7	10.8
740	840	616.5	508.5	70	7	4	10.9	12
940	1040	816.5	708.5	70	9	5	13.5	14.6

KK80 (Light Duty)

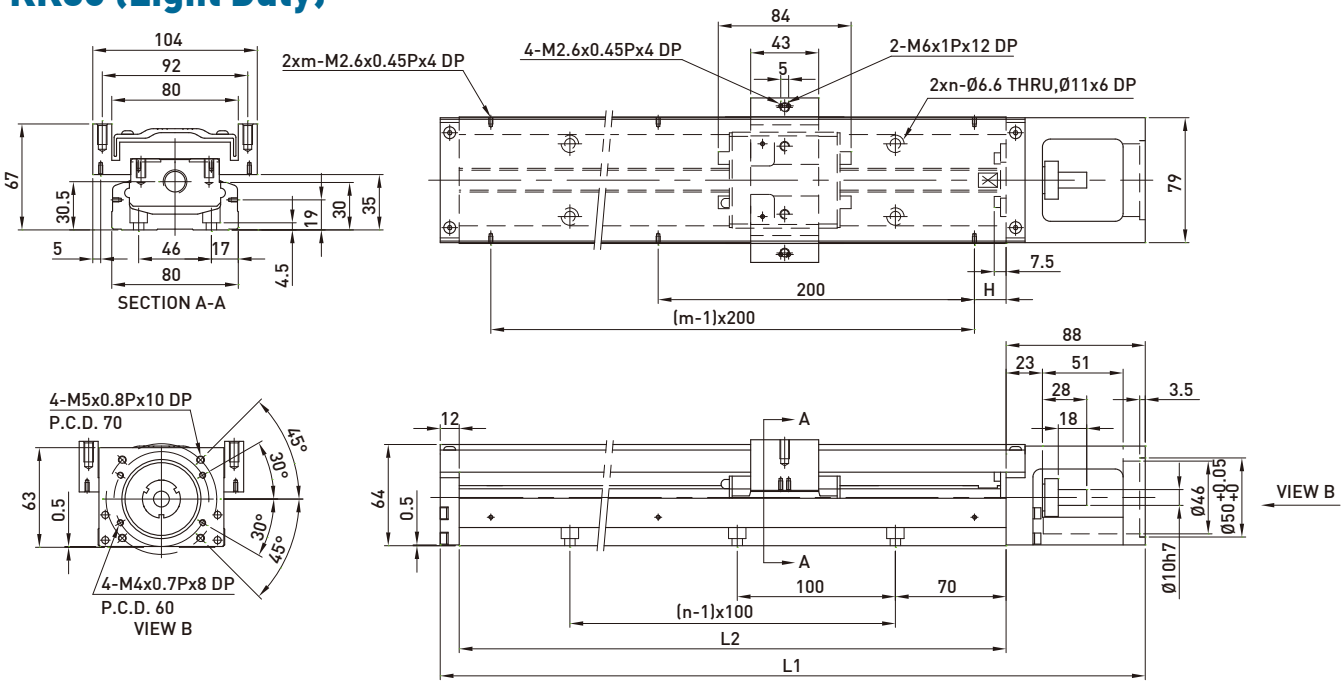

Rail Length L2 (mm)	Total Length L1 (mm)	Maximum Stroke (mm)		H (mm)	n	m	Mass (kg)	
		S1 Block	S2 Block				S1 Block	S2 Block
340	440	248.5	172.5	70	3	2	5.5	6.1
440	540	348.5	272.5	20	4	3	6.8	7.4
540	640	448.5	372.5	70	5	3	7.9	8.5
640	740	548.5	472.5	20	6	4	9.2	9.8
740	840	648.5	572.5	70	7	4	10.5	11.1
940	1040	848.5	772.5	70	9	5	13	13.6

KK86 (Standard)

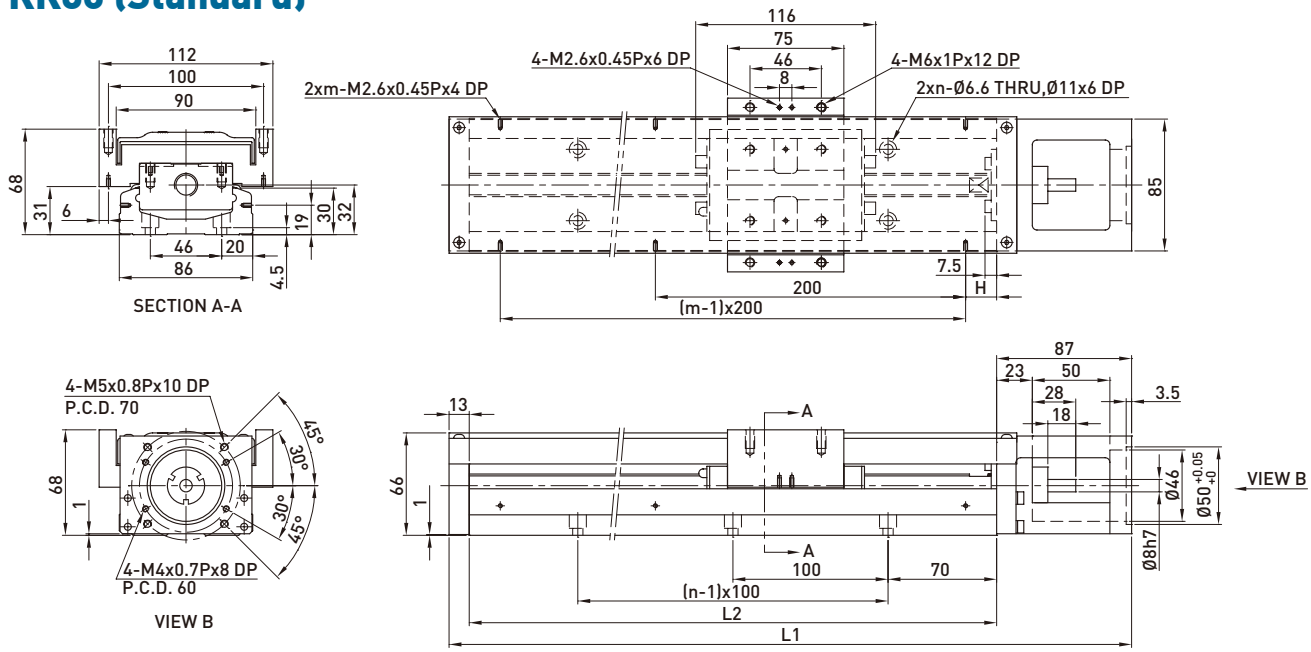

Rail Length L2 (mm)	Total Length L1 (mm)	Maximum Stroke (mm)		H (mm)	n	m	Mass (kg)	
		A1 Block	A2 Block				A1 Block	A2 Block
340	440	216.5	108.5	70	3	2	6.5	7.3
440	540	316.5	208.5	20	4	3	7.8	8.6
540	640	416.5	308.5	70	5	3	9.0	9.8
640	740	516.5	408.5	20	6	4	10.3	11.3
740	840	616.5	508.5	70	7	4	11.6	12.4
940	1040	816.5	708.5	70	9	5	13.0	13.8

KK86 (Light Duty)

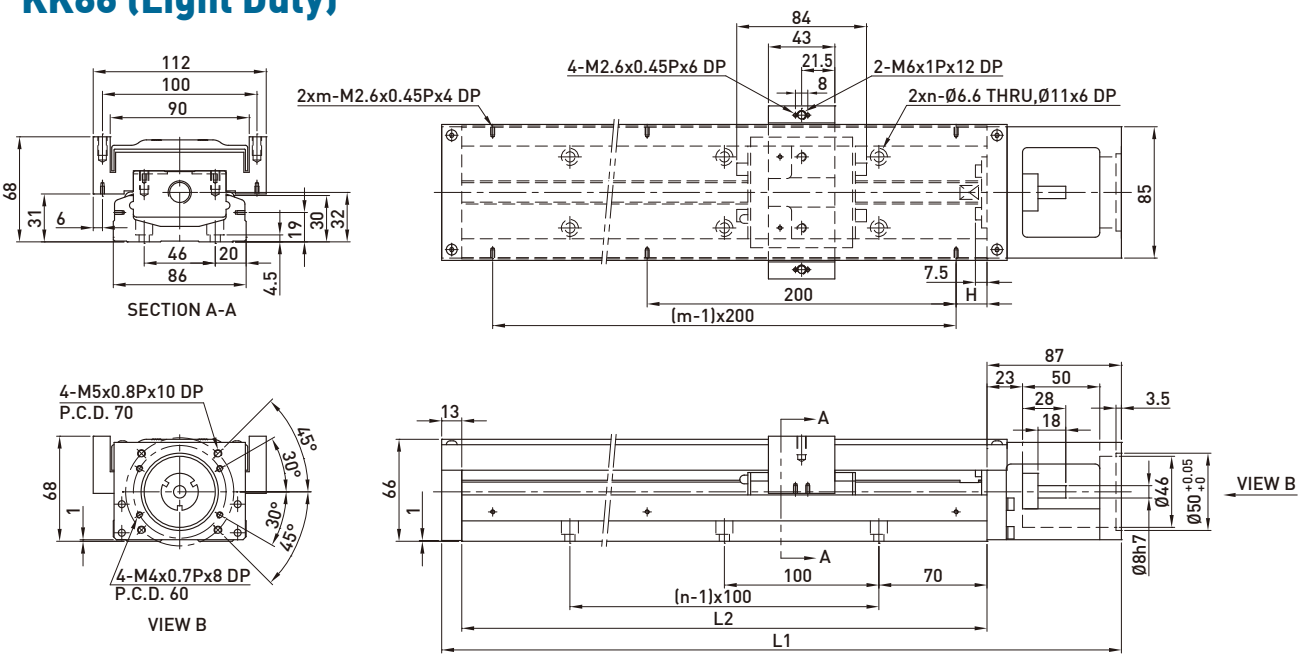

Rail Length L2 (mm)	Total Length L1 (mm)	Maximum Stroke (mm)		H (mm)	n	m	Mass (kg)	
		S1 Block	S2 Block				S1 Block	S2 Block
340	440	248.5	172.5	70	3	2	6.3	7.1
440	540	348.5	272.5	20	4	3	7.6	8.4
540	640	448.5	372.5	70	5	3	8.8	9.6
640	740	548.5	472.5	20	6	4	10.1	11.1
740	840	648.5	572.5	70	7	4	11.4	12.2
940	1040	848.5	772.5	70	9	5	12.8	13.6

KK86D (Standard)

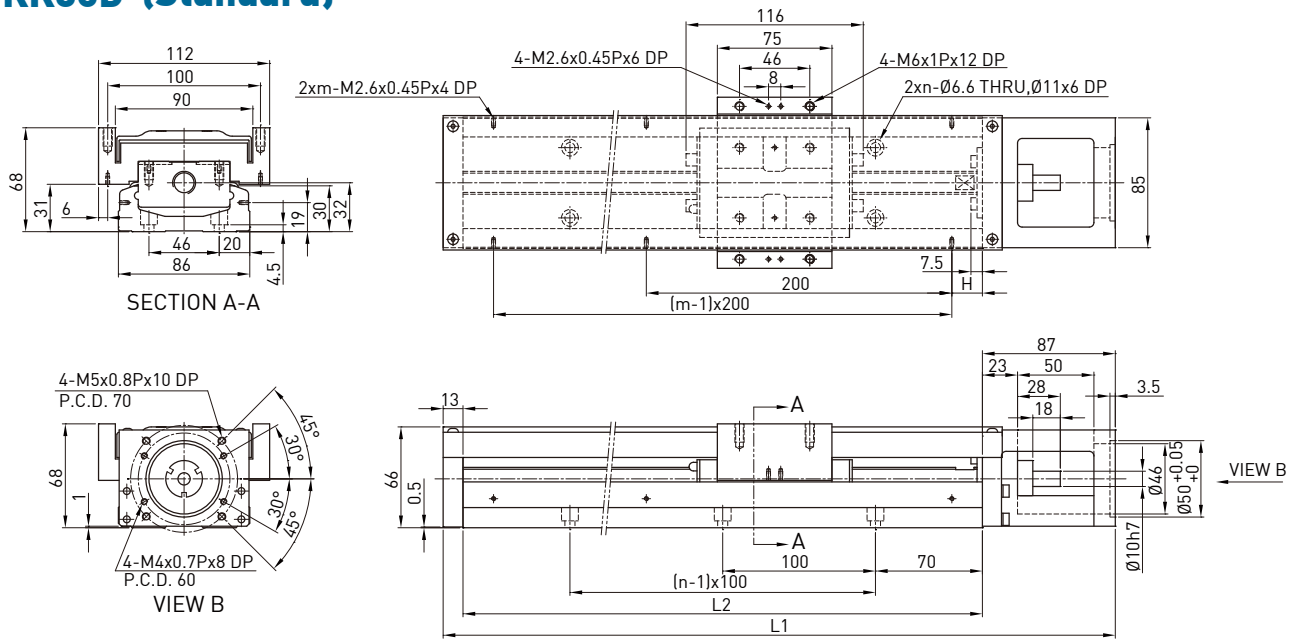

Rail Length L2 (mm)	Total Length L1 (mm)	Maximum Stroke (mm)		H (mm)	n	m	Mass (kg)	
		A1 Block	A2 Block				A1 Block	A2 Block
340	440	216.5	108.5	70	3	2	6.5	7.3
440	540	316.5	208.5	20	4	3	7.8	8.6
540	640	416.5	308.5	70	5	3	9.0	9.8
640	740	516.5	408.5	20	6	4	10.3	11.3
740	840	616.5	508.5	70	7	4	11.6	12.4
940	1040	816.5	708.5	70	9	5	13.0	13.8

KK86D (Light Duty)

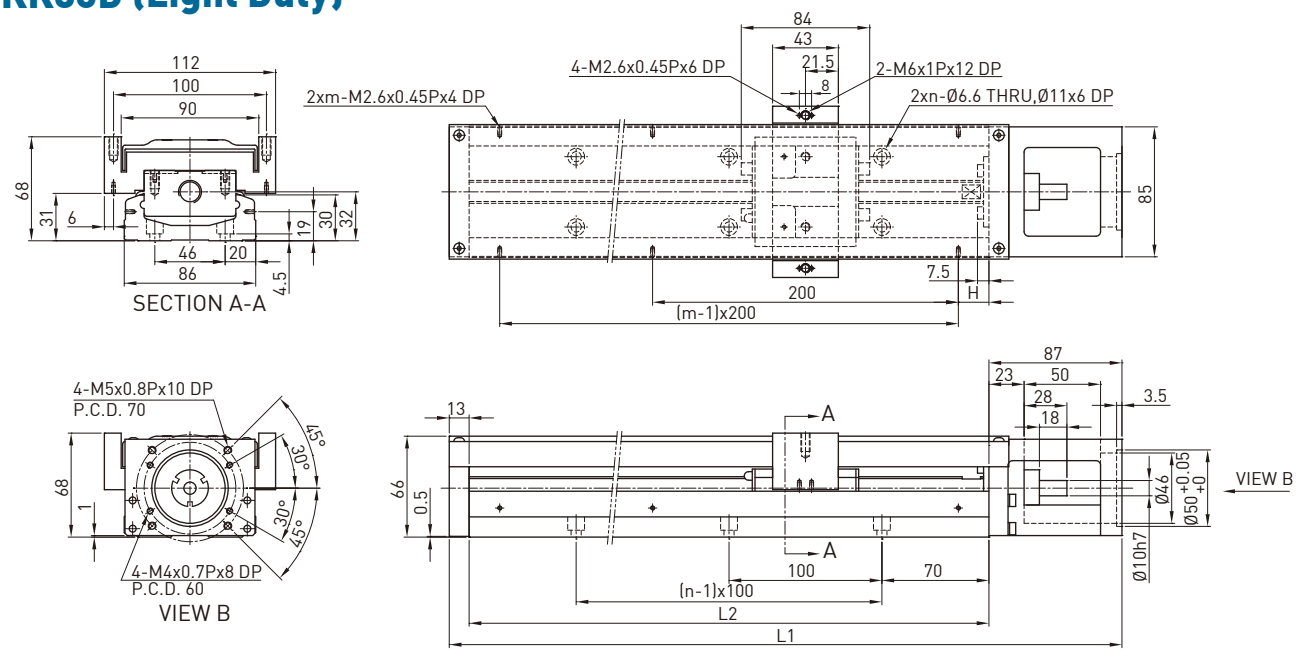

Rail Length L2 (mm)	Total Length L1 (mm)	Maximum Stroke (mm)		H (mm)	n	m	Mass (kg)	
		S1 Block	S2 Block				S1 Block	S2 Block
340	440	248.5	172.5	70	3	2	6.3	7.1
440	540	348.5	272.5	20	4	3	7.6	8.4
540	640	448.5	372.5	70	5	3	8.8	9.6
640	740	548.5	472.5	20	6	4	10.1	11.1
740	840	648.5	572.5	70	7	4	11.4	12.2
940	1040	848.5	772.5	70	9	5	12.8	13.6

KK100

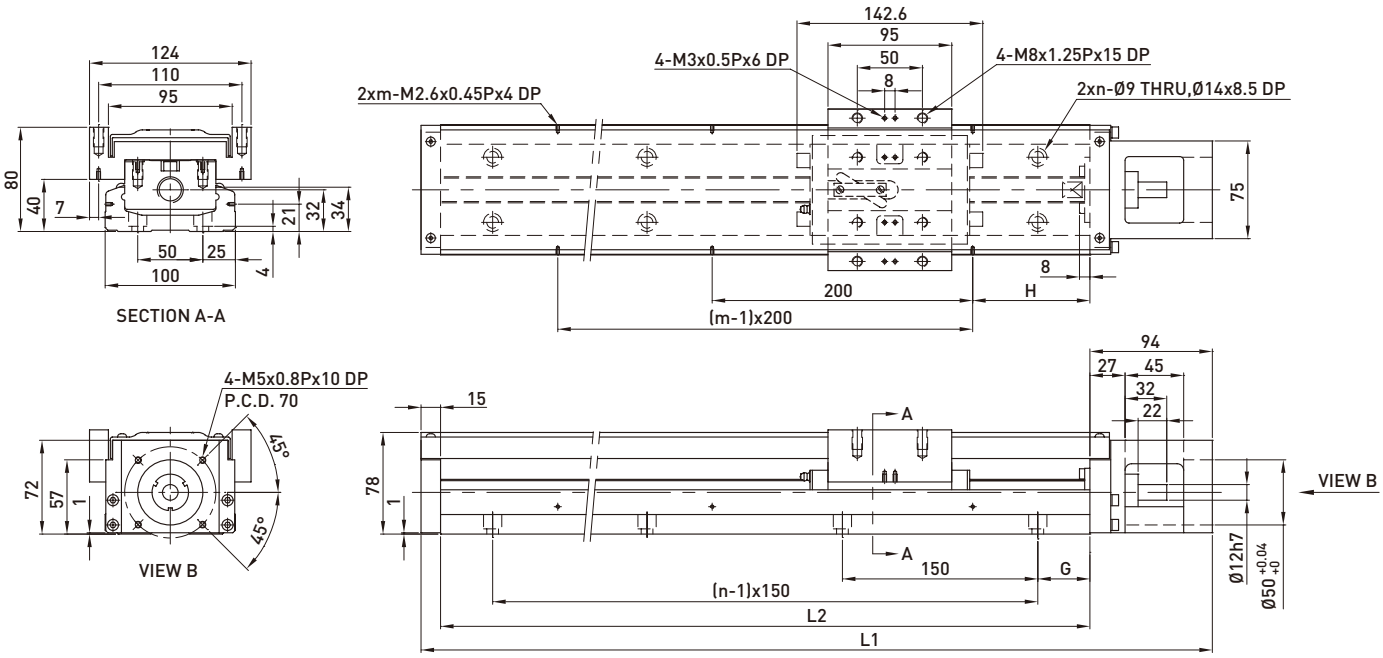

Rail Length L2 (mm)	Total Length L1 (mm)	Maximum Stroke (mm)		G (mm)	H (mm)	n	m	Mass (kg)	
		A1 Block	A2 Block					A1 Block	A2 Block
980	1089	828	700	40	90	7	5	20.4	22.1
1080	1189	928	800	15	40	8	6	22.2	23.9
1180	1289	1028	900	65	90	8	6	24.0	25.7
1280	1389	1128	1000	40	40	9	7	25.7	27.4
1380	1489	1228	1100	15	90	10	7	27.5	29.2

KK130

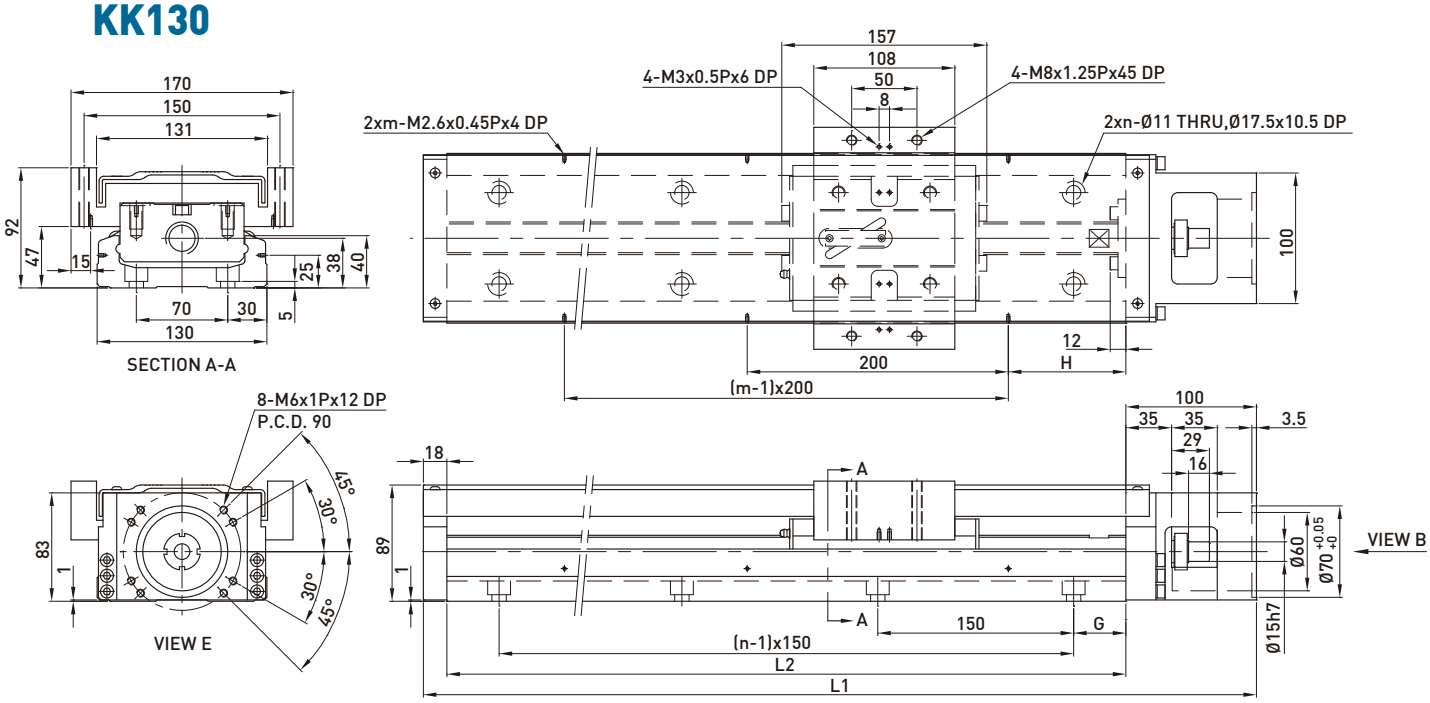

Rail Length L2 (mm)	Total Length L1 (mm)	Maximum Stroke (mm)		G (mm)	H (mm)	n	m	Mass (kg)	
		A1 Block	A2 Block					A1 Block	A2 Block
980	1098	811	659	40	90	7	5	31.9	35.9
1180	1298	1011	859	65	90	8	6	37.1	41.1
1380	1498	1211	1059	90	90	9	7	42.2	46.2
1680	1798	1511	1359	90	40	11	9	49.9	53.9

2.10 Motor Housing and Motor Adaptor Flange

2.10.1 Motor Selection

HIWIN Mikrosystem Servo Motor

Motor Output	Motor	Weight (kg)	Flange Selection								+Brake Weight (kg)	Drive	Weight (kg)	Remarks
			KK30	KK40	KK50	KK60	KK80	KK86	KK100	KK130				
50W	FRLS052□□A4□	0.45	-	F2	F2	F2	F3	F3	-	-	0.58	D2T	1.25	220V
100W	FRLS102□□A4□	0.6	-	F2	F2	F2	F3	F3	-	-	0.76			220V
200W	FRLS202□□06□	1	-	-	-	-	F0	F0	F0	F1	1.5			220V
400W	FRLS402□□06□	1.45	-	-	-	-	F0	F0	F0	F1	1.86			220V
750W	FRMS752□□08□	2.66	-	-	-	-	-	-	F1	F2	3.32			220V

Mitsubishi Servo Motor

Motor Output	Motor	Weight (kg)	Flange Selection								+Brake Weight (kg)	Drive	Weight (kg)	Remarks
			KK30	KK40	KK50	KK60	KK80	KK86	KK100	KK130				
10W	HC-AQ0135D	0.19	F1	-	-	-	-	-	-	-	0.29	M2-JR-03A5	0.2	
20W	HC-AQ0235D	0.22	F1	-	-	-	-	-	-	-	0.32	M2-JR-03A5	0.2	
50W	HF-KP053	0.35	-	F1	F1	F1	F2	F2	-	-	0.75	MR-J3S-10A	0.8	220V
100W	HF-KP13	0.56	-	F1	F1	F1	F2	F2	-	-	0.89	MR-J3S-10A	0.8	220V
200W	HF-KP23	0.94	-	-	-	-	F0	F0	F0	F1	1.6	MR-J3S-20A	0.8	220V
400W	HF-KP43	1.5	-	-	-	-	F0	F0	F0	F1	2.1	MR-J3S-40A	1	220V
750W	HF-KP73	2.9	-	-	-	-	-	-	F1	F2	4	MR-J3S-70A	1.4	220V

Panasonic Servo Motor

Motor Output	Motor	Weight (kg)	Flange Selection								+Brake Weight (kg)	Drive	Weight (kg)	Remarks
			KK30	KK40	KK50	KK60	KK80	KK86	KK100	KK130				
50W	MSMD5AZP1	0.32	-	F2	F2	F2	F3	F3	-	-	0.53	MADDT1105	0.8	110V
50W	MSMD5AZP1	0.32	-	F2	F2	F2	F3	F3	-	-	0.53	MADDT1205	0.8	220V
100W	MSMD011P1	0.47	-	F2	F2	F2	F3	F3	-	-	0.68	MADDT1107	0.8	110V
100W	MSMD012P1	0.47	-	F2	F2	F2	F3	F3	-	-	0.68	MADDT1205	0.8	220V
200W	MSMD021P1	0.82	-	-	-	-	F1	F1	-	-	1.3	MADDT2110	1.1	110V
200W	MSMD022P1	0.82	-	-	-	-	F1	F1	-	-	1.3	MADDT1207	0.8	220V
400W	MSMD041P1	1.2	-	-	-	-	F1	F1	-	-	1.7	MADDT3120	1.5	110V
400W	MSMD042P1	1.2	-	-	-	-	F1	F1	-	-	1.7	MADDT2210	1.1	220V
750W	MSMD082S1	2.3	-	-	-	-	F4	F4	F2	F4	3.1	MADDT3520	1.5	220V

Yasukawa Servo Motor

Motor Output	Motor	Weight (kg)	Flange Selection								+Brake Weight (kg)	Drive	Weight (kg)	Remarks
			KK30	KK40	KK50	KK60	KK80	KK86	KK100	KK130				
10W	SGMMV-A1A2A21	0.13	F2	-	-	-	-	-	-	-	0.215	SGDV-R90A01A	0.9	220V
20W	SGMMV-A2A2A21	0.17	F2	-	-	-	-	-	-	-	0.27	SGDV-R90A01A	0.9	220V
50W	SGMAV-A5ADA61	0.3	-	F1	F1	F1	F2	F2	-	-		SGDV-R70A01A	0.9	with key
50W	SGMAV-A5ADA2C	0.3	-	F1	F1	F1	F2	F2	-	-		SGDV-R70A01A	0.9	no key
50W	SGMAV-A5ADA21	0.3	-	F1	F1	F1	F2	F2	-	-	0.75	SGDV-R70A01A	0.9	Mid inertia
100W	SGMAV-01ADA64	0.4	-	F1	F1	F1	F2	F2	-	-	0.89	SGDV-R90A01A	0.9	
200W	SGMAV-02ADA65	0.9	-	-	-	-	F0	F0	F0	F1	1.6	SGDV-1R6A01A	0.9	
400W	SGMAV-04ADA66	1.2	-	-	-	-	F0	F0	F0	F1	2.1	SGDV-2R8A01A	1	
750W	SGMAV-08ADA67	2.6	-	-	-	-			F1	F2	4	SGDV-5R5A01A	1.5	

Oriental Step Motor

Series	Model	Flange Selection								Built in Motor	Weight (kg)	Built in Drive	Weight (kg)
		KK30	KK40	KK50	KK60	KK80	KK86	KK100	KK130				
CSK 2 phase	CSK243-AP	-	F3	F3	F5	-	-	-	-	PK243-01A	0.21	CSD2109-P	0.12
	CSK244-AP	-	F3	F3	F5	-	-	-	-	PK244-01A	0.27	CSD2112-P	0.12
	CSK245-AP	-	F3	F3	F5	-	-	-	-	PK245-01A	0.35	CSD2112-P	0.12
	CSK264-AP	-	-	-	F4	F6	F6	-	-	PK264-02A	0.45	CSD2120-P	0.12
	CSK266-AP	-	-	-	F4	F6	F6	-	-	PK266-02A	0.7	CSD2120-P	0.12
	CSK268-AP	-	-	-	F4	F6	F6	-	-	PK268-02A	1	CSD2120-P	0.12
	CSK296-AP	-	-	-	-	-	-	F4	F3	PK296-03A	1.7	CSD2145P	0.2
	CSK299-AP	-	-	-	-	-	-	F4	F3	PK299-03A	2.8	CSD2145P	0.2
	CSK2913-AP	-	-	-	-	-	-	F4	F3	PK2913-02A	3.8	CSD2140P	0.2
CSK 2 phase	CSK523-AP	F3	-	-	-	-	-	-	-	PK523A	0.1	SD5103P3	0.04
CFKII 5 phase micro stepping	CFK543AP2	-	F3	F3	F5	-	-	-	-	PK543NAW	0.21	DFC5107P	0.2
	CFK544AP2	-	F3	F3	F5	-	-	-	-	PK544NAW	0.27	DFC5107P	0.2
	CFK545AP2	-	F3	F3	F5	-	-	-	-	PK545NAW	0.35	DFC5107P	0.2
	CFK564AP2	-	-	-	-	F5	F5	-	-	PK564NAW	0.6	DFC5114P	0.2
	CFK566AP2	-	-	-	-	F5	F5	-	-	PK566NAW	0.8	DFC5114P	0.2
	CFK569AP2	-	-	-	-	F5	F5	-	-	PK569NAW	1.3	DFC5114P	0.2
	CFK566HAP2	-	-	-	-	F5	F5	-	-	PK566HNAW	0.8	DFC5128P	0.22
	CKF569HAP2	-	-	-	-	F5	F5	-	-	PK569HNAW	1.3	DFC5128P	0.22
	CFK596HAP2	-	-	-	-	-	-	F3	-	PK596HNAW	1.7	DFC5128P	0.22
	CFK599HAP2	-	-	-	-	-	-	F3	-	PK599HNAW	2.8	DFC5128P	0.22
	CFK5913HAP2	-	-	-	-	-	-	F3	-	PK5913HNAW	3.8	DFC5128P	0.22
UMK 2 phase	UMK243A	-	F3	F3	F5	-	-	-	-	PK243-01	0.21	UDK2109	0.47
	UMK244A	-	F3	F3	F5	-	-	-	-	PK244-01	0.27	UDK2112	0.47
	UMK245A	-	F3	F3	F5	-	-	-	-	PK245-01	0.35	UDK2112	0.47
	UMK264A	-	-	-	F4	F6	F6	-	-	PK264-02	0.45	UDK2120	0.47
	UMK266A	-	-	-	F4	F6	F6	-	-	PK266-02	0.7	UDK2120	0.47
	UMK268A	-	-	-	F4	F6	F6	-	-	PK268-02	1	UDK2120	0.47
RK 5 phase	RK543AA	-	F3	F3	F5	-	-	-	-	PK543W	0.25	RKD507-A	0.4
	RK544AA	-	F3	F3	F5	-	-	-	-	PK544W	0.3	RKD507-A	0.4
	RK545AA	-	F3	F3	F5	-	-	-	-	PK545W	0.4	RKD507-A	0.4
	RK566AA	-	-	-	-	F5	F5	-	-	PK566W	0.8	RKD514L-A	0.85
	RK569AA	-	-	-	-	F5	F5	-	-	PK569W	1.3	RKD514L-A	0.85
	RK596AA	-	-	-	-	-	-	F3	-	PK596W	1.7	RKD514H-A	0.85
	RK599AA	-	-	-	-	-	-	F3	-	PK599W	2.8	RKD514H-A	0.85
	RK5913AA	-	-	-	-	-	-	F3	-	PK5913W	3.8	RKD514H-A	0.85
ASC α-step	ASC34AK	F3	-	-	-	-	-	-	-	ASM34AK	0.15	ASD10A-K	0.25

2.10.2 HIWIN AC Servo Motor & Drive Selection Model Comparison Table

KK40

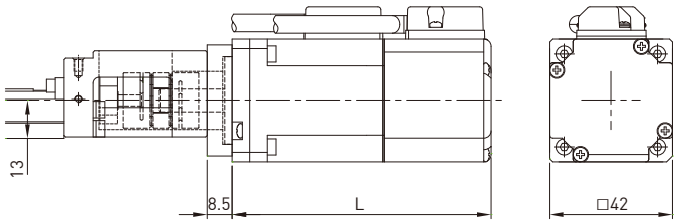

Model selection	Rated Output	Brakes	Flange	L(mm)	Weight (kg)*
M05□	50W	NO	F2	88.5	0.49
K05□		YES		117	0.62
M10□	100W	NO		110.5	0.64
K10□		YES		139	0.80

KK50

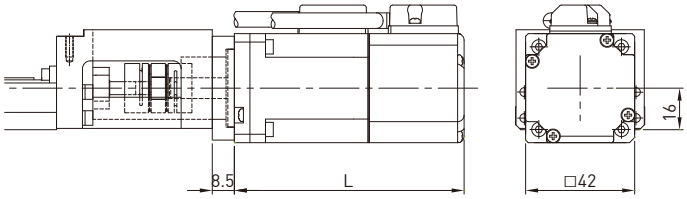

Model selection	Rated Output	Brakes	Flange	L(mm)	Weight (kg)*
M05□	50W	NO	F2	88.5	0.49
K05□		YES		117	0.62
M10□	100W	NO		110.5	0.64
K10□		YES		139	0.80

KK60

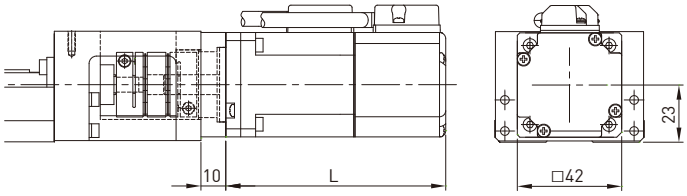

Model selection	Rated Output	Brakes	Flange	L(mm)	Weight (kg)*
M05□	50W	NO	F2	88.5	0.51
K05□		YES		117	0.64
M10□	100W	NO		110.5	0.66
K10□		YES		139	0.82

KK80

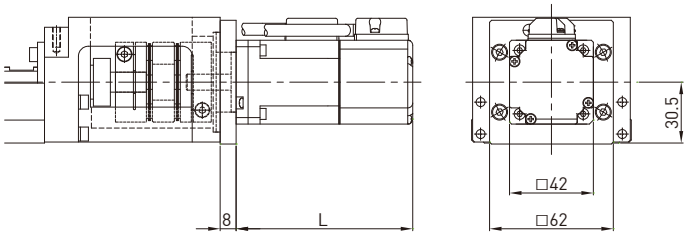

Model selection	Rated Output	Brakes	Flange	L(mm)	Weight (kg)*
M05□	50W	NO	F3	88.5	0.65
K05□		YES		117	0.78
M10□	100W	NO		110.5	0.80
K10□		YES		139	0.96

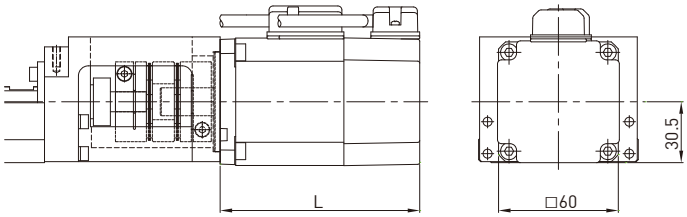

Model selection	Rated Output	Brakes	Flange	L(mm)	Weight (kg)*
M20□	200W	NO	F0	100	1.13
K20□		YES		133	1.63
M40□	400W	NO		121.5	1.58
K40□		YES		154.5	1.99

*1. The weight is the total weight of the motor, flange and coupling. It does not include the weight of the single-axis robot.
2. Motor and drive specification ref. catalog P.167

KK86

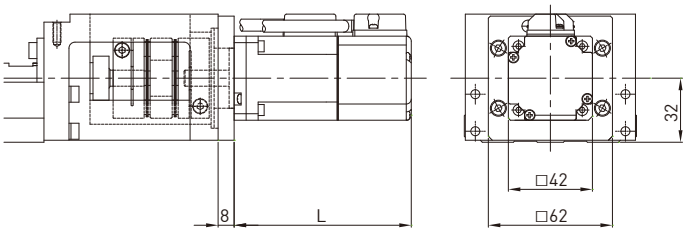

Model selection	Rated Output	Brakes	Flange	L(mm)	Weight (kg)*
M05□	50W	NO	F3	88.5	0.65
K05□		YES		117	0.78
M10□	100W	NO		110.5	0.80
K10□		YES		139	0.96

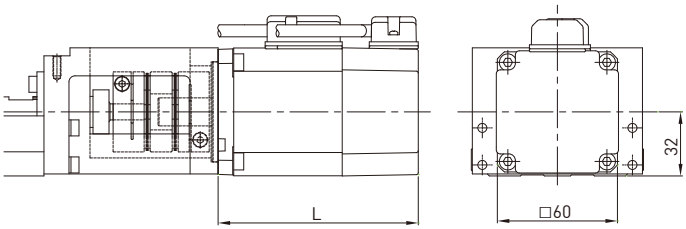

Model selection	Rated Output	Brakes	Flange	L(mm)	Weight (kg)*
M20□	200W	NO	F0	100	1.13
K20□		YES		133	1.63
M40□	400W	NO		121.5	1.58
K40□		YES		154.5	1.99

KK100

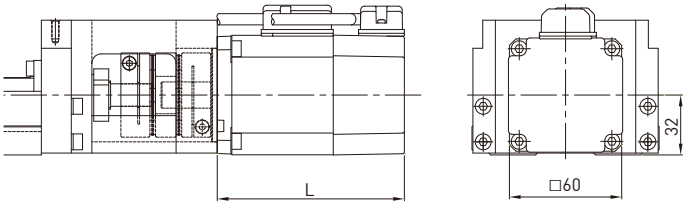

Model selection	Rated Output	Brakes	Flange	L(mm)	Weight (kg)*
M20□	200W	NO	F0	100	1.14
K20□		YES		133	1.64
M40□	400W	NO		121.5	1.59
K40□		YES		154.5	2.00

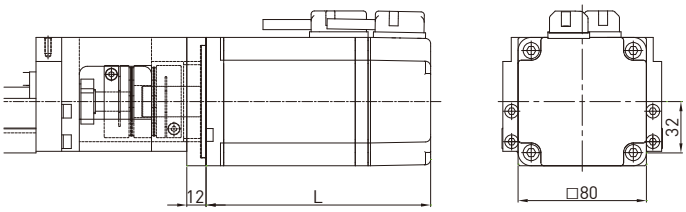

Model selection	Rated Output	Brakes	Flange	L(mm)	Weight (kg)*
M75□	750W	NO	F1	140	2.93
K75□		YES		176	3.59

KK130

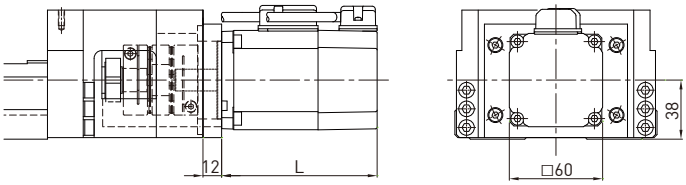

Model selection	Rated Output	Brakes	Flange	L(mm)	Weight (kg)*
M20□	200W	NO	F0	100	1.14
K20□		YES		133	1.64
M40□	400W	NO		121.5	1.59
K40□		YES		154.5	2.00

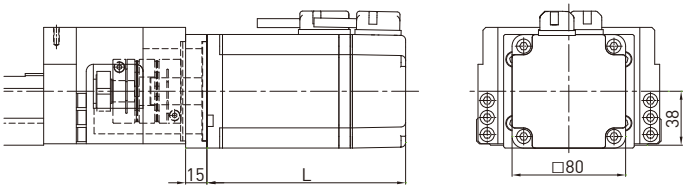

Model selection	Rated Output	Brakes	Flange	L(mm)	Weight (kg)*
M75□	750W	NO	F1	140	2.96
K75□		YES		176	3.62

*1. The weight is the total weight of the motor, flange and coupling. It does not include the weight of the single-axis robot.
2. Motor and drive specification ref. catalog P.167

2.10.3 Motor Housing and Motor Adaptor Flange

KK30

Motor Housing F0

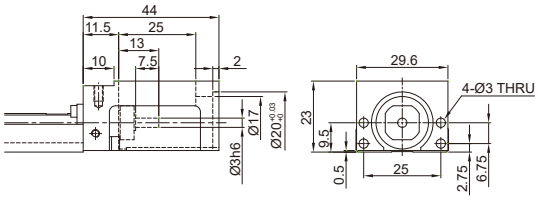

Motor Adaptor Flange F1

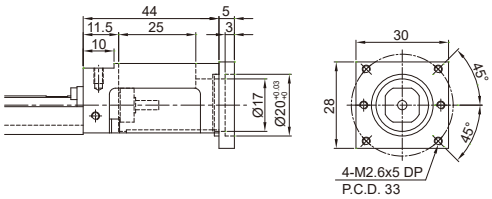

Motor Adaptor Flange F3

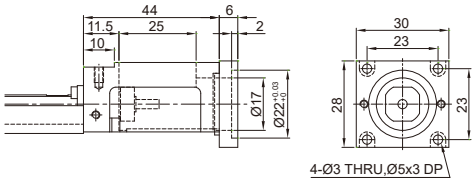

Motor Adaptor Flange F2

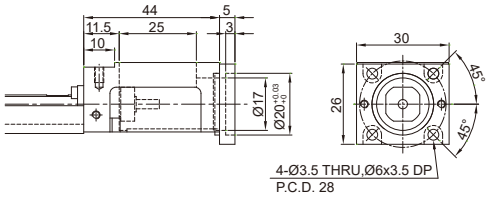

KK40

Motor Housing F0

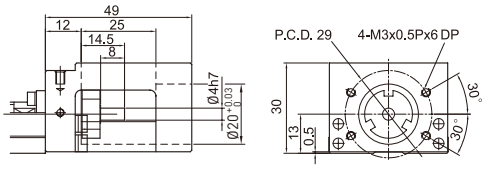

Motor Adaptor Flange F1

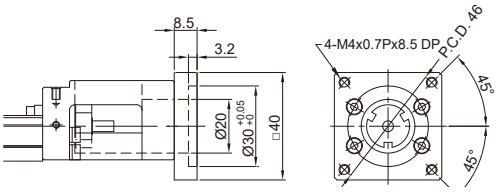

Motor Adaptor Flange F3

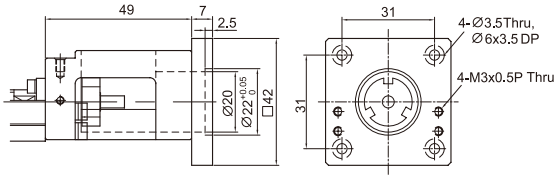

Motor Adaptor Flange F2

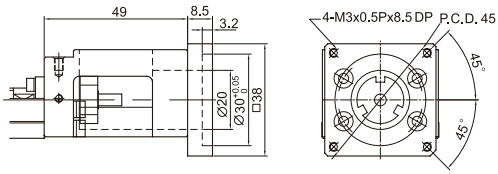

Mount Housing H0

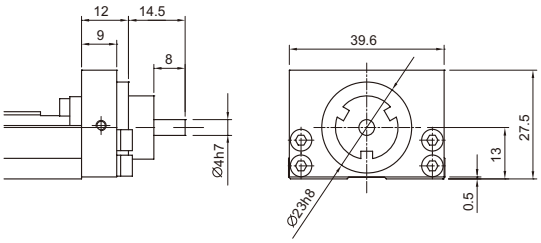

KK50

Motor Housing F0

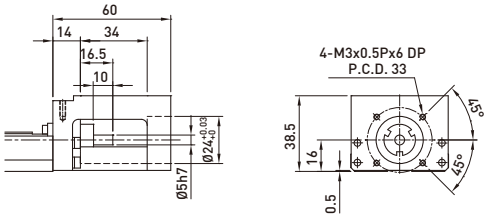

Motor Adaptor Flange F1

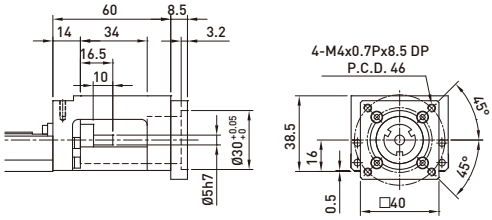

Motor Adaptor Flange F2

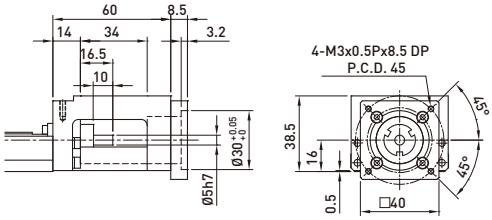

Motor Adaptor Flange F3

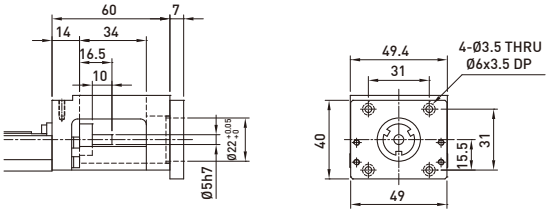

Mount Housing H0

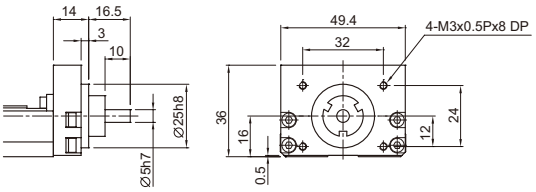

KK60

Motor Housing F0

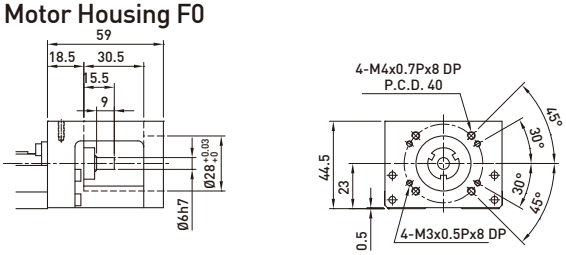

Motor Adaptor Flange F1

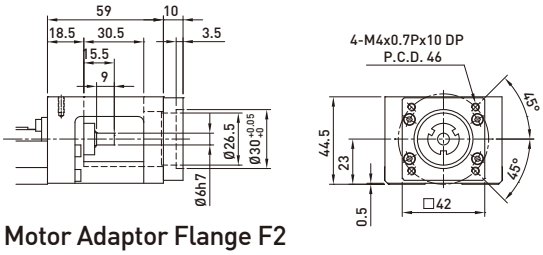

Motor Adaptor Flange F2

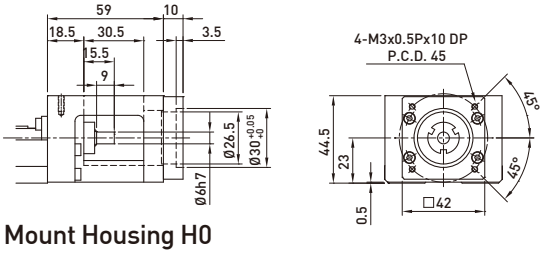

Mount Housing H0

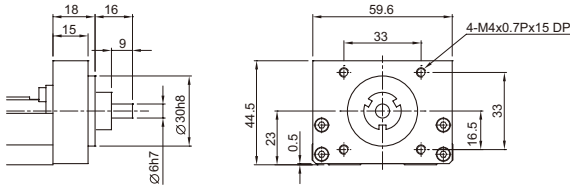

Motor Adaptor Flange F3

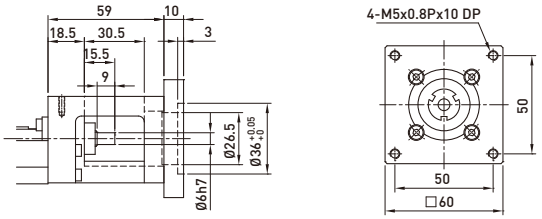

Motor Adaptor Flange F4

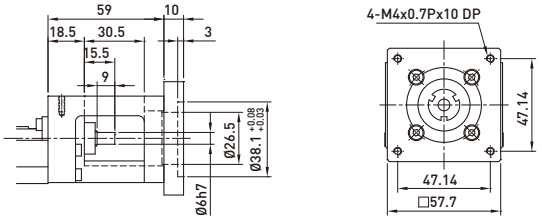

Motor Adaptor Flange F5

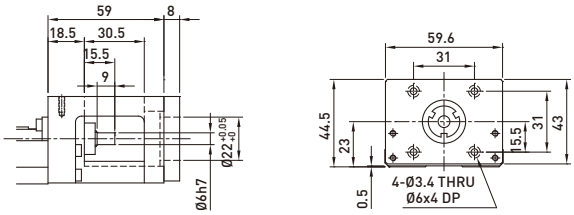

Mount Housing H1

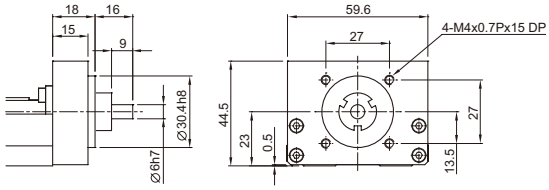

KK80

Motor Housing F0

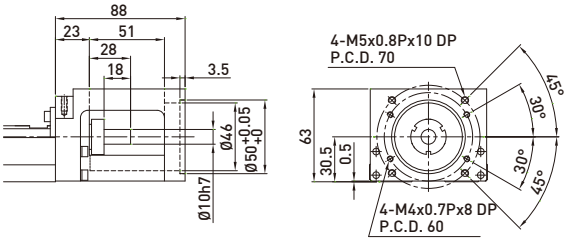

Motor Adaptor Flange F1

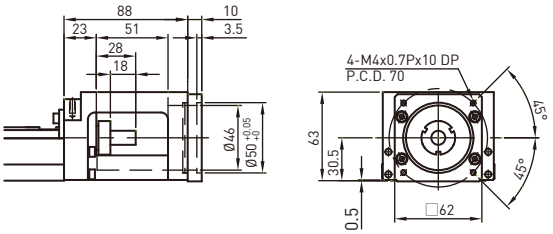

Motor Adaptor Flange F4

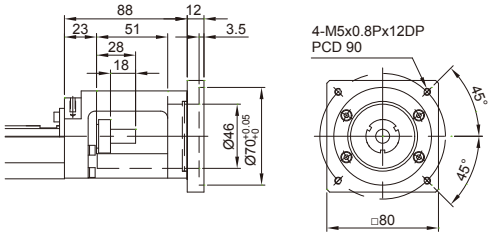

Motor Adaptor Flange F2

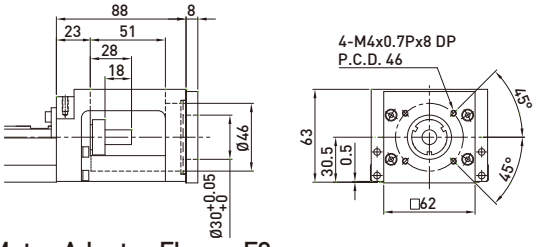

Motor Adaptor Flange F5

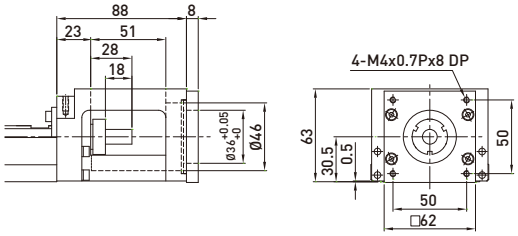

Motor Adaptor Flange F3

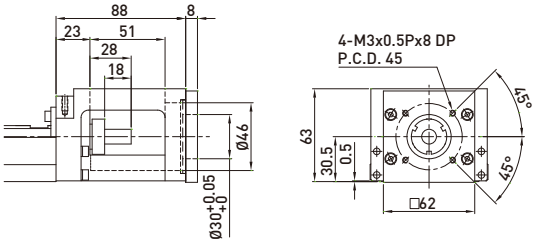

Motor Adaptor Flange F6

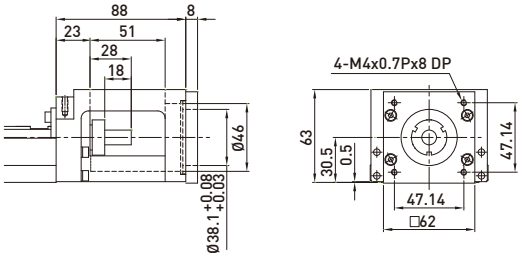

Mount Housing H0

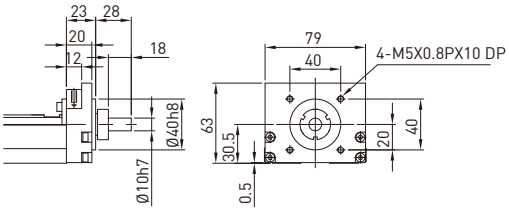

KK86

Motor Housing F0

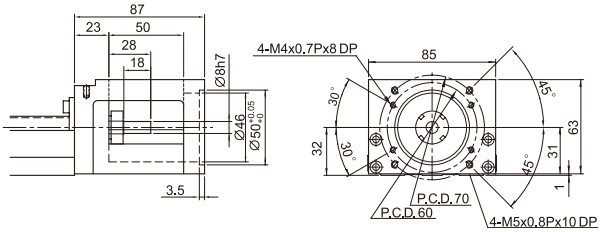

Motor Adaptor Flange F4

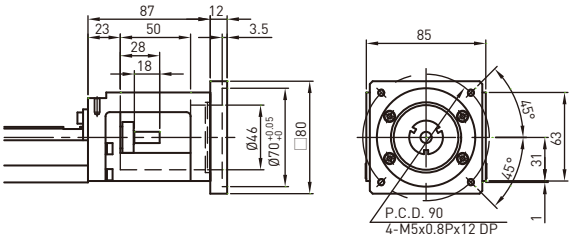

Motor Adaptor Flange F1

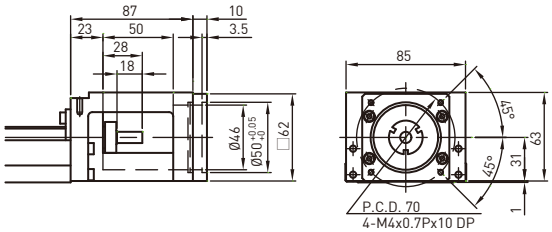

Motor Adaptor Flange F5

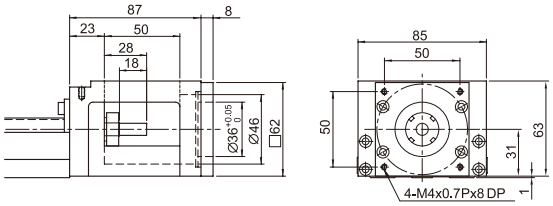

Motor Adaptor Flange F2

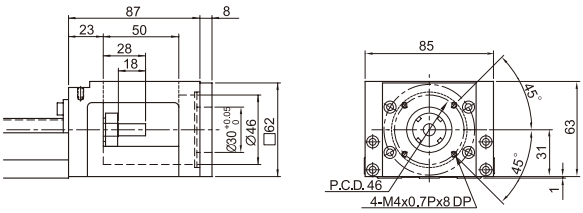

Motor Adaptor Flange F6

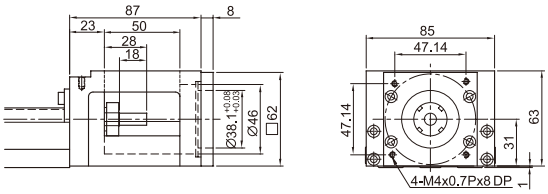

Motor Adaptor Flange F3

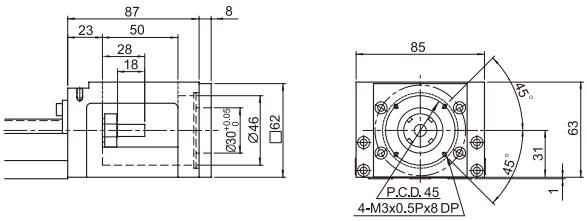

Mount Housing H0

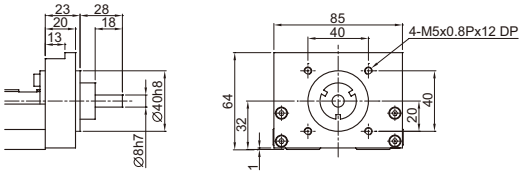

KK100

Motor Housing F0

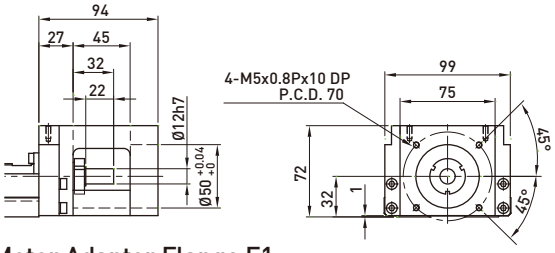

Motor Adaptor Flange F3

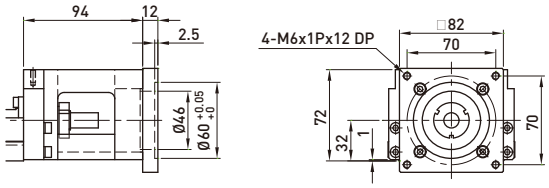

Motor Adaptor Flange F1

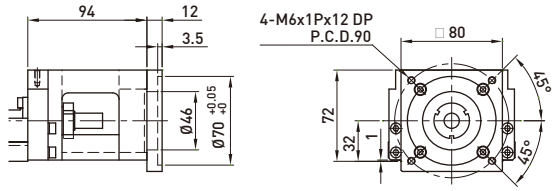

Motor Adaptor Flange F4

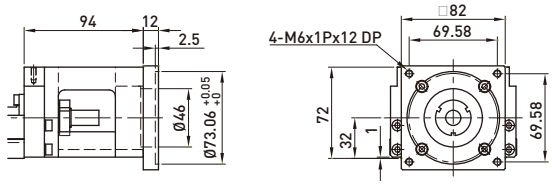

MotorAdaptor Flange F2

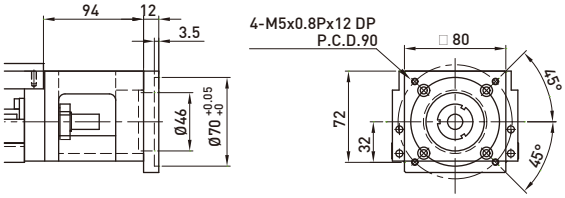

Mount Housing H0

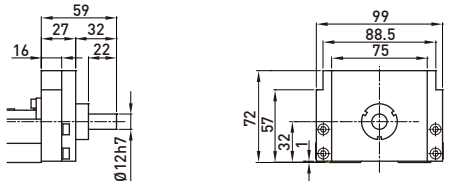

KK130

Motor Housing F0

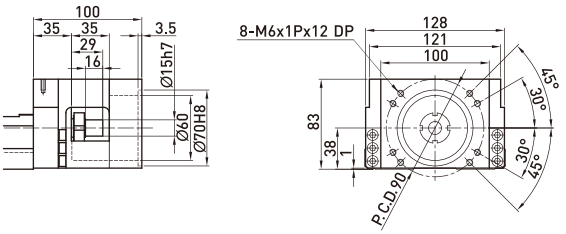

Motor Adaptor Flange F3

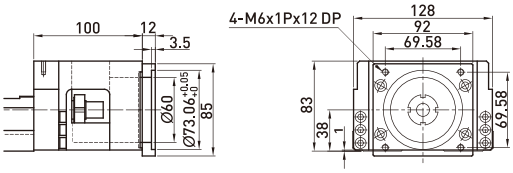

Motor Adaptor Flange F1

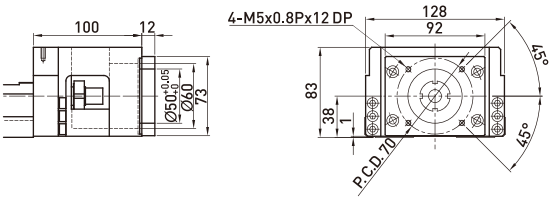

Motor Adaptor Flange F4

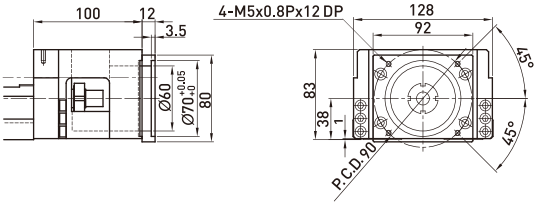

Motor Adaptor Flange F2

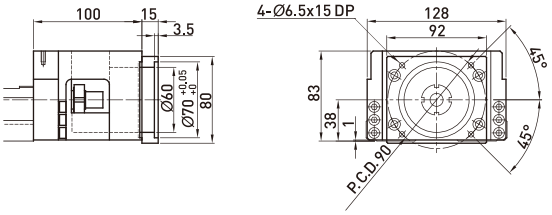

Mount Housing H0

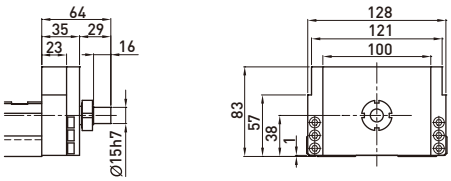

2.11 Optional Accessories

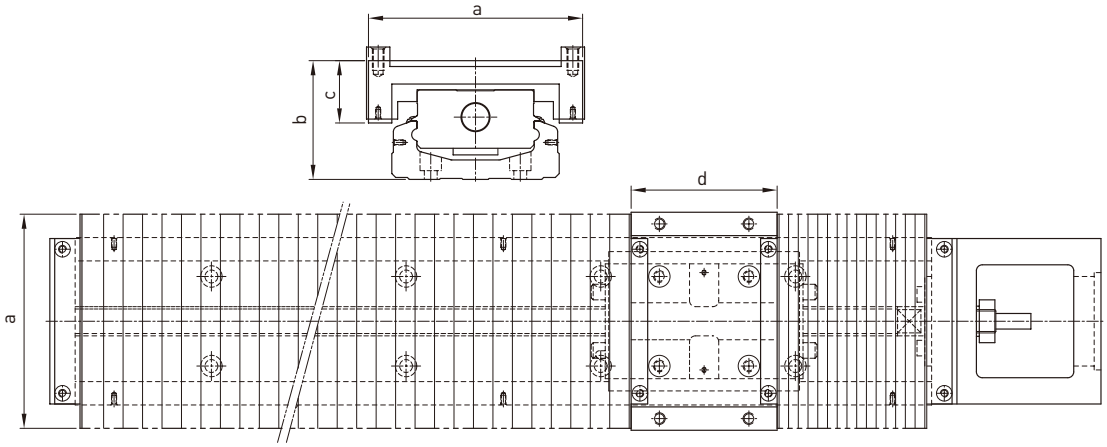

Unit : mm

Nominal Width	Rail Length	Stroke	Min.	Max.	a	b	c	d
KK30	75	22	15	37	47	22.5	15.5	23
	100	37	20	57				
	125	52	25	77				
	150	67	30	97				
	175	82	35	117				
	200	97	40	137				
KK40	100	35	16	51	60	29.5	19	33
	150	63	27	90				
	200	93	37	130				
KK50	150	60	21.5	81.5	62	37	19	47
	200	95	29	124				
	250	130	36.5	166.5				
	300	160	46.5	206.5				
KK60	150	56	16	80	84	45.5	24	54
	200	106	20	126				
	300	166	40	206				
	400	234	56	290				
	500	306	70	376				
	600	366	90	456				
KK80	340	181	42	223	106	62.5	34.5	75
	440	257	54	311				
	540	333	66	399				
	640	409	78	487				
	740	485	90	575				
	940	649	108	757				
KK86	340	188	36	224	110	61	32	75
	440	260	50	310				
	540	336	62	398				
	640	408	76	484				
	740	480	90	570				
	940	640	110	750				
KK100	980	769	58	827	150	73	41	95
	1080	855	65	920				
	1180	945	70	1015				
	1280	1029	78	1107				
	1380	1115	85	1200				
KK130	980	748	62	810	180	89	53	108
	1180	916	78	994				
	1380	1084	94	1178				
	1680	1346	113	1459				

2.12 Switch

Switch rail

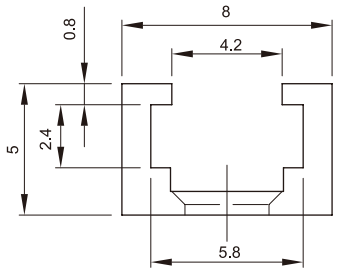

Switch

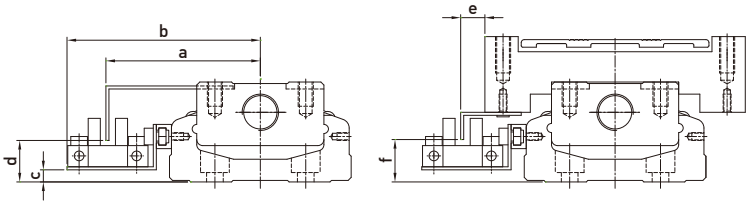

Nominal Width	a	b	c	d	e	f
KK40	41.5	54.1	0.5	10.8	15.3	12
KK50	45.5	59	1	10	15	11
KK60	51	63.8	4	14.5	8	13
KK80	61	74	8	19	9	19
KK86	63.5	76.7	8	18	8	18
KK100	71	84	10	20	9	20
KK130	85.5	98.5	14	24	0.5	23

Switch 1 : Omron EE-SX671

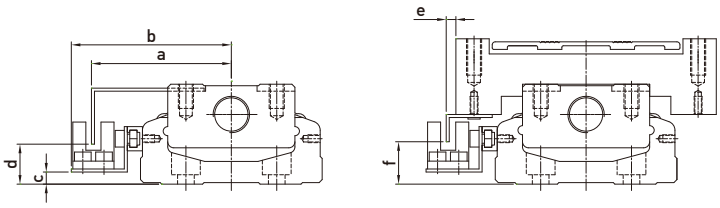

Nominal Width	a	b	c	d	e	f
KK40	36.5	44.3	1	9.8	10.5	12
KK50	41.3	48	1	10.5	10.2	11
KK60	46.2	52.8	4	14	3.2	13
KK80	56	63	8	18	4	18
KK86	59	65.7	8	18	3	18
KK100	66	73	10	20	4.2	20
KK130	80.8	87.5	14	23.5	-4.1	23.5

Switch 2 : Omron EE-SX674

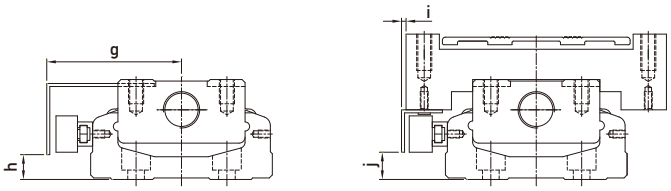

Nominal Width	g	h	i	j
KK40	40	5.5	13.5	5.5
KK50	39.5	5.7	7	19.5
KK60	44.5	9	2	9
KK80	54	12	2	13
KK86	57	13	1	13
KK100	64.5	15	2.5	15
KK130	79	19	-6	19

Switch 3: PANASONIC GX-F12A

Switch 4 : PANASONIC GX-F12A-P

Nominal Width	g	h	i	j
KK30	28	1.8	5.8	1.8

Switch 5 : YAMATAKE APM-D3B1-03

Single-Axis Robot
3. SK Series

The HIWIN SK quiet single-axis robot with SynchMotion™ Technology offers quieter operation, smooth movement, low particle emission rate, longer service life and superior lubrication. With the SynchMotion™ Technology, SK single-axis robots will be more suitable for industries which require higher speeds and quieter performance.

3.1 Features

◎ Low noise
◎ Low particle emission rate
◎ Longer service life
◎ Superior lubrication
◎ Easy installation and maintenance

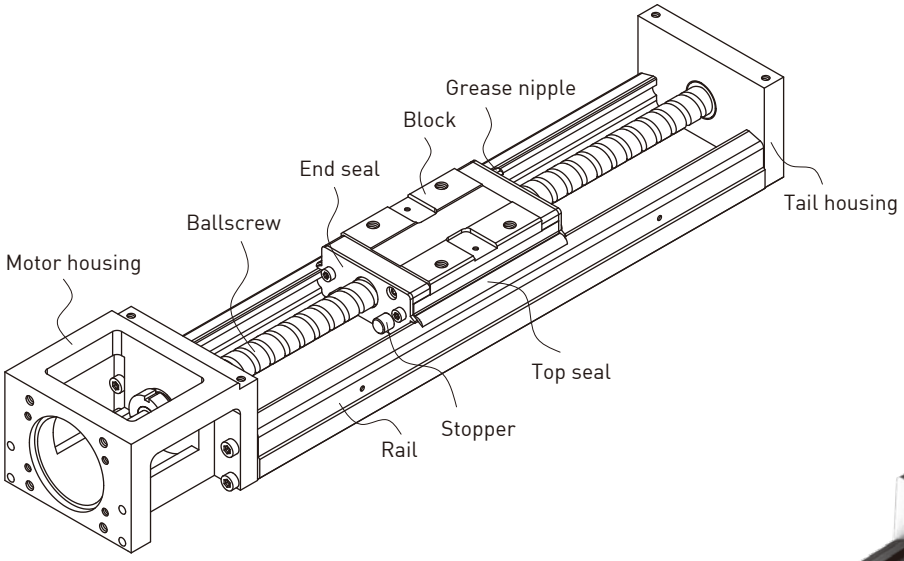

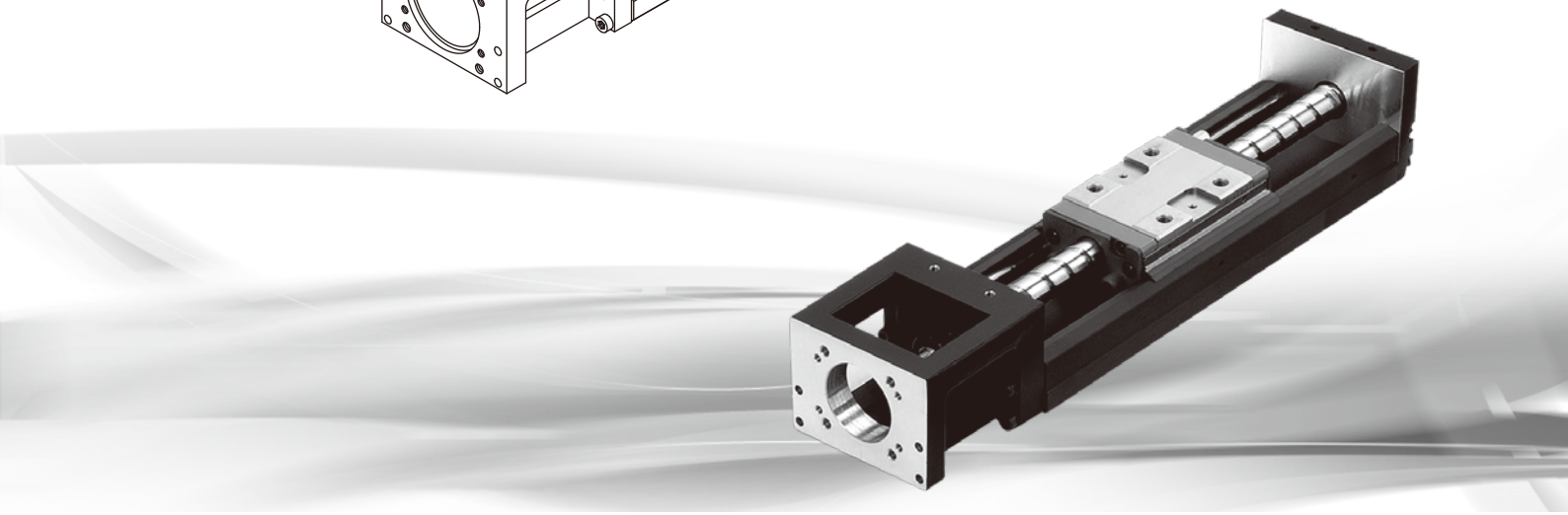

3.1.1 SynchMotion™ Technology

With SynchMotion™ Technology, the rolling elements are interposed between the partitions of SynchMotion™ to provide improved circulation. By eliminating the contact between the rolling elements, collision noise and sound levels are greatly reduced.

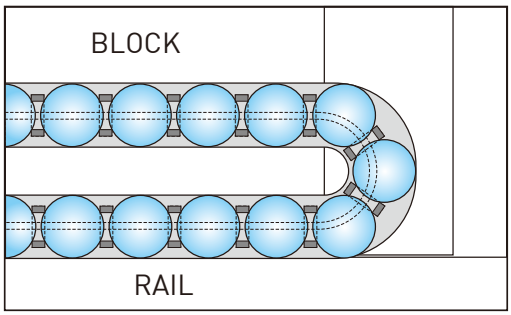

3.1.2 Tangent Circulation Technology

The rolling elements enter the circulation system by following the spiral pathway. When compared to the traditional external circulation, the Tangent Circulation Technology diminishes the impact caused by the rolling elements entering the circulation system, improving the speed, acceleration and smoothness while reducing the noise.

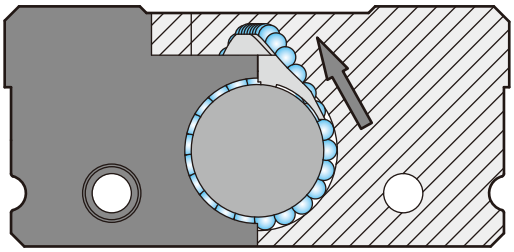

3.1.3 Noise Test

Incorporating both SynchMotion™ Technology and Tangent Circulation Technology, the noise reduction is about 3~5 dB during operation.

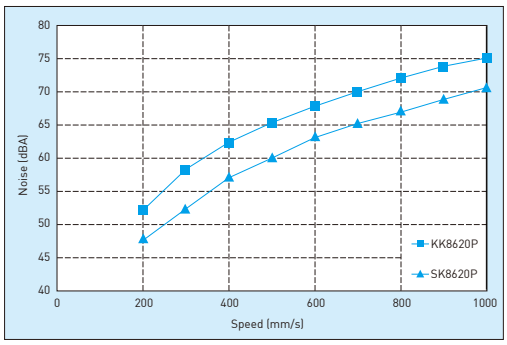

3.2 Model Number of SK Series

SK 60D 10 P E - 400 E A 2 E - F0 C S0 M051

- SK: SK Series
- 60D: Nominal Width: 60, 60D, 86, 86D
- 10: Ballscrew Lead : SK60/SK60D: 5, 10; SK86/SK86D: 10, 20
- P: Accuracy Grade: P: Precision, C: Normal
- E: E: Ballscrew Special Order; None: Normal Type
- 400: Rail Length (unit : mm) SK60/SK60D : 150, 200, 300, 400, 500, 600; SK86/SK86D : 340, 440, 540, 640, 740, 940
- E: E: Rail Special Order; None: Normal Type
- A: Block Type: A: Standard, S: Light Duty
- 2: Number of Blocks: 1 or 2
- E: E: Block Special Order; None: Block Standard
- F0: Motor Adaptor Flange ref. catalog (P.66); FE : Flange Special Order
- C: C: Aluminum Cover; None: Normal Type
- S0: Limit Switch: ref. catalog (P.67); S0: Switch Rail Only; S1: Omron SX671; S2: Omron SX674; S3: SUNX GX-F12A; S4: SUNX GX-F12A-P; SE: Sensor Special Order; None: No Limit Switch and Switch Rail
- M051: Motor specification: ref. catalof P.65; M: customer specified

3.3 Specifications

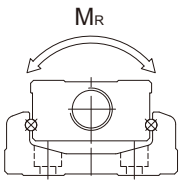

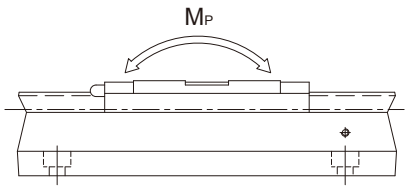

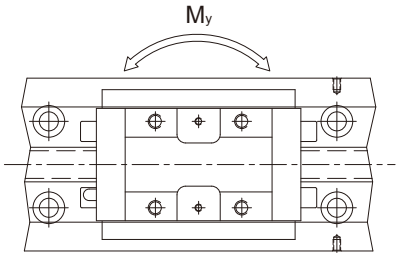

Model No.		Ballscrew				Guideway															
		Nominal Diameter (mm)	Lead (mm)	Basic Dynamic Load (N)	Basic Static Load (N)	Basic Dynamic Load Rating (N)	Basic Dynamic Load Rating (N)	Basic Static Load Rating (N)	Basic Static Load Rating (N)	Static Rated Moment											
										Allowable Static Moment M_P (N-m) (pitching)				Allowable Static Moment M_Y (N-m) (yawing)				Allowable Static Moment M_R(N-m) (rolling)			
						Block A	Block S	Block A	Block S	Block A1	Block A2	Block S1	Block S2	Block A1	Block A2	Block S1	Block S2	Block A1	Block A2	Block S1	Block S2
SK6005	Precision	12	5	3744	6243	15132	9900	19811	10800	168	891	60	366	168	891	60	366	413	826	245	490
	Normal			3377	5626																
SK6010	Precision	12	10	2410	3743	15132	9900	19811	10800	168	891	60	366	168	891	60	366	413	826	245	490
	Normal			2107	3234																
SK8610	Precision	15	10	7144	12642	26011	17580	35793	20450	565	2481	210	1281	565	2481	210	1281	1063	2126	635	1270
	Normal			6429	11387																
SK8620	Precision	15	20	4645	7655	26011	17580	35793	20450	565	2481	210	1281	565	2481	210	1281	1063	2126	635	1270
	Normal			4175	6889																

3.4 Accuracy Grade

Unit : mm

Model	Rail Length	Repeatability		Accuracy		Running Parallelism		Starting Torque(N-cm)	
		Precision	Normal	Precision	Normal	Precision	Normal	Precision	Normal
SK60	150	±0.003	±0.005	0.020	-	0.010	-	15	7
	200								
	300								
	400								
	500	±0.003	±0.005	0.025	-	0.015	-	15	7
	600								
SK86	340	±0.003	±0.005	0.025	-	0.015	-	15	10
	440								
	540								
	640								
	740	±0.003	±0.005	0.030	-	0.020	-	17	10
	940		±0.005	0.040	-	0.030	-	25	10

3.5 Maximum Speed Limit

Model	Ballscrew Lead (mm)	Rail Length (mm)	Speed (mm/sec)	
			Precision	Normal
SK60	05	150	550	390
		200	550	390
		300	550	390
		400	550	390
		500	550	390
		600	340	340
	10	150	1100	790
		200	1100	790
		300	1100	790
		400	1100	790
		500	1100	790
		600	670	670
SK86	10	340	740	520
		440	740	520
		540	740	520
		640	740	520
		740	740	520
		940	610	430
	20	340	1480	1050
		440	1480	1050
		540	1480	1050
		640	1480	1050
		740	1480	1050
		940	1220	870

3.6 Life Calculations

3.6.1 Service Life

Under repeated stress between the raceway and the rolling elements, pitting and flaking will occur as it reaches fatigue failure. The service life of the SK single-axis robot is defined as the distanced traveled before any failure of the raceway or rolling elements appear.

3.6.2 Nominal Life (L)

The service life varies greatly even when the SK units are manufactured in the same way or operated under the same conditions. For this reason, nominal life is used as the criteria for predicting the service life of a SK unit.

3.6.3 Nominal Life Calculation

The calculating formulas are divided into two parts, guideway and ballscrew. The smaller of the two values would be the recommended nominal life of the SK unit.

Nominal life formulas for both the guideway and ballscrew depend on several parameters as shown below:

◎ Guideway

$$L = \left(\frac{f_t}{f_w} \cdot \frac{C}{P_n} \right)^3 \text{x } 50 \text{ km}$$

L : Life Rating (km)
f_t : Contact Coefficient (ref. Table 1)
f_w : Loading Coefficient (ref. Table 2)
C : Basic Dynamic Load Rating (N)
P_n : Calculated Loading (N)

Table 1

Block type	Contact Coefficient f_t
A1, S1	1.0
A2, S2	0.81

Table 2

Operating Condition		Loading Coefficient f_w
Thrust and Vibration	Velocity (V)	
No Thrust	V < 15m/min	1.0 ~ 1.5
Low Vibration	15m/min < V < 60m/min	1.5 ~ 2.0
High Vibration	V > 60m/min	2.0 ~ 3.5

◎ Ballscrew and Bearing

$$L = \left(\frac{1}{f_w} \cdot \frac{C_a}{P_{a,n}} \right)^3 \text{x } 10^6 \text{ rev}$$

L : Life Rating (rev.)
f_w : Loading Coefficient (ref. Table 2)
C_a : Basic Dynamic Load Rating (N)
$P_{a,n}$: Axial Loading (N)

3.7 Lubrication

Insufficient lubrication of the guideway would lead to a reduction of the service life.

The lubricant provides the following functions:

◎ Reducing rolling friction and avoiding abrasion
◎ Providing a lubricating film and extending the service life
◎ Anti-rusting

3.7.1 Lubricating grease

Re-lubricating the SK single-axis robot every 100km is recommended. Generally, grease is applied for speeds under 60 m/min. For operating speeds over 60 m/min, a grease with a higher viscosity should be used.

$$T = \frac{100 \times 1000}{V_e \times 60}$$

T : Lubricating frequncy (hrs)
Ve : Speed (m/min)

3.7.2 Grease nipple

◎ 1 block

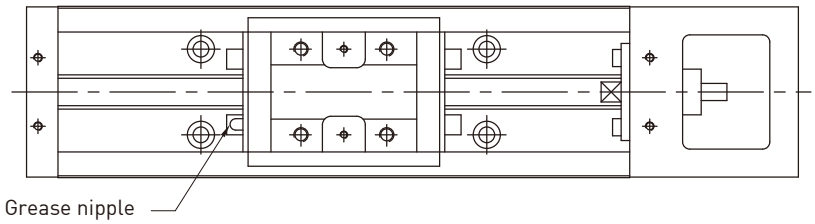

◎ 2 blocks

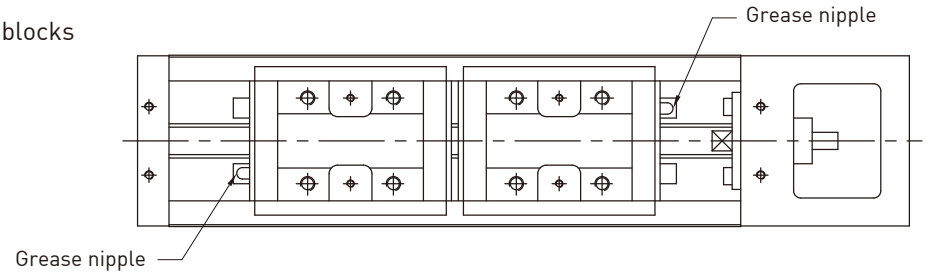

Type of grease nipple

SK60
SK86

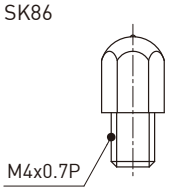

3.8 Dimensions

3.8.1 Without cover

SK60 (Standard)

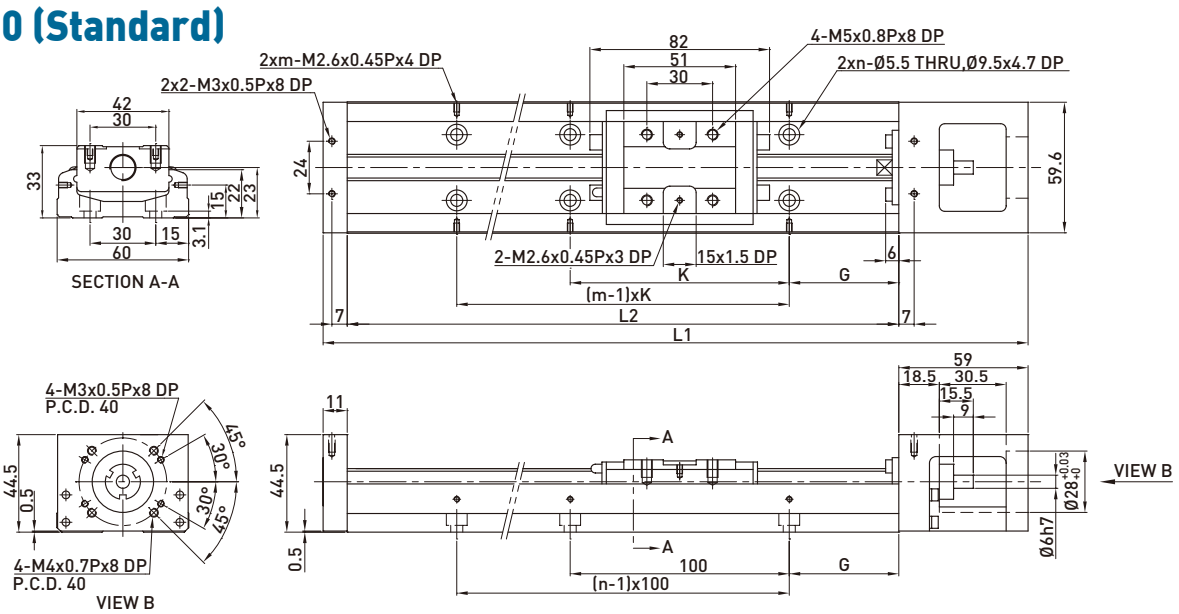

Rail Length L2 (mm)	Total Length L1 (mm)	Maximum Stroke (mm)		G (mm)	K (mm)	n	m	Mass (kg)	
		A1 Block	A2 Block					A1 Block	A2 Block
150	220	60	-	25	100	2	2	1.5	-
200	270	110	-	50	100	2	2	1.8	-
300	370	210	135	50	200	3	2	2.4	2.7
400	470	310	235	50	100	4	4	3	3.3
500	570	410	335	50	200	5	3	3.6	3.9
600	670	510	435	50	100	6	6	4.2	4.6

Note:Special ballscrew spindle end of 8 mm diameter is available, please contact hiwin if necessary.

SK60 (Light Duty)

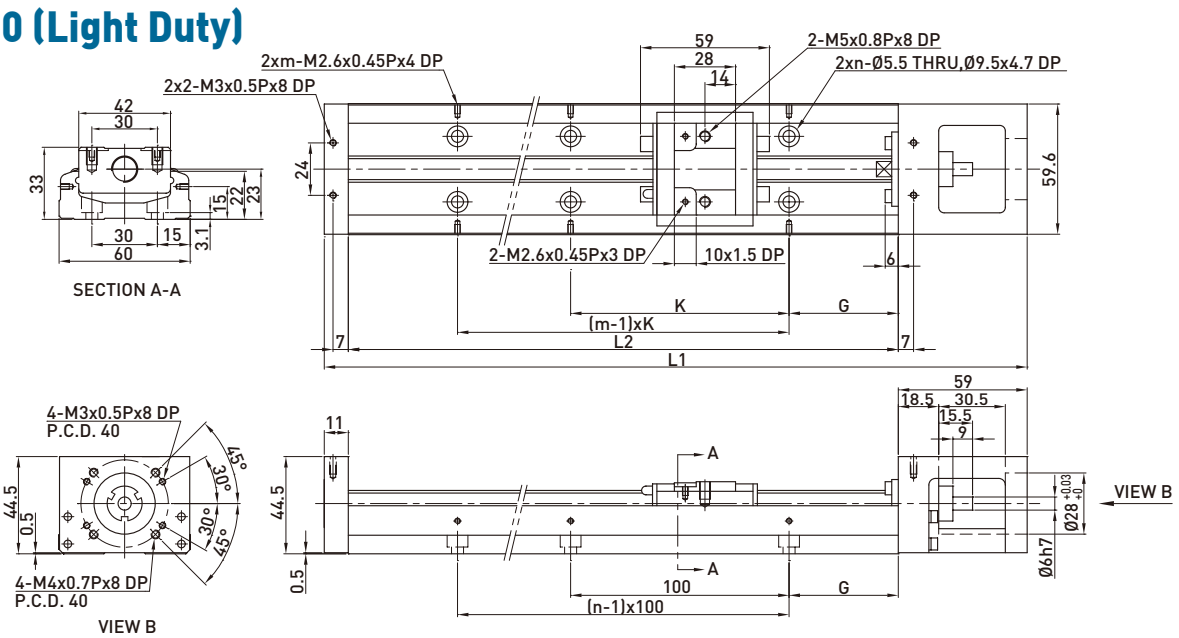

Rail Length L2 (mm)	Total Length L1 (mm)	Maximum Stroke (mm)		G (mm)	K (mm)	n	m	Mass (kg)	
		S1 Block	S2 Block					S1 Block	S2 Block
150	220	85	34	25	100	2	2	1.4	1.6
200	270	135	84	50	100	2	2	1.7	1.9
300	370	235	184	50	200	3	2	2.3	2.5
400	470	335	284	50	100	4	4	2.9	3.1
500	570	435	384	50	200	5	3	3.5	3.7
600	670	535	484	50	100	6	6	4.1	4.3

SK60D (Standard)

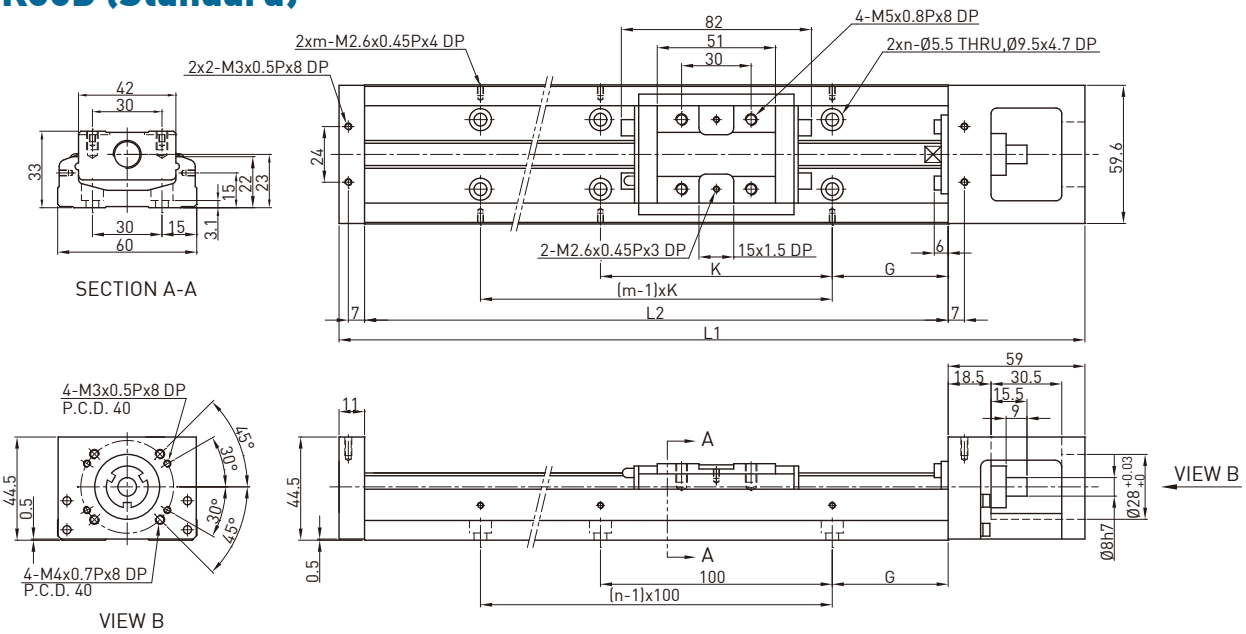

Rail Length L2 (mm)	Total Length L1 (mm)	Maximum Stroke (mm)		G (mm)	K (mm)	n	m	Mass (kg)	
		A1 Block	A2 Block					A1 Block	A2 Block
150	220	60	-	25	100	2	2	1.5	-
200	270	110	-	50	100	2	2	1.8	-
300	370	210	135	50	200	3	2	2.4	2.7
400	470	310	235	50	100	4	4	3	3.3
500	570	410	335	50	200	5	3	3.6	3.9
600	670	510	435	50	100	6	6	4.2	4.6

SK60D (Light Duty)

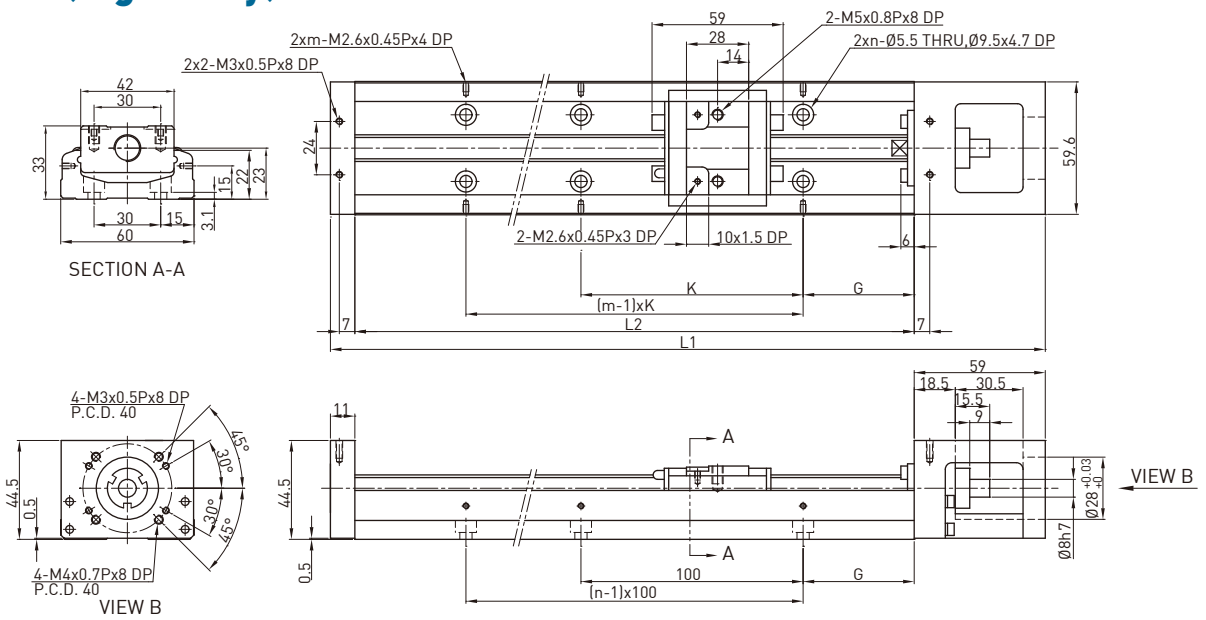

Rail Length L2 (mm)	Total Length L1 (mm)	Maximum Stroke (mm)		G (mm)	K (mm)	n	m	Mass (kg)	
		S1 Block	S2 Block					S1 Block	S2 Block
150	220	85	34	25	100	2	2	1.4	1.6
200	270	135	84	50	100	2	2	1.7	1.9
300	370	235	184	50	200	3	2	2.3	2.5
400	470	335	284	50	100	4	4	2.9	3.1
500	570	435	384	50	200	5	3	3.5	3.7
600	670	535	484	50	100	6	6	4.1	4.3

SK86 (Standard)

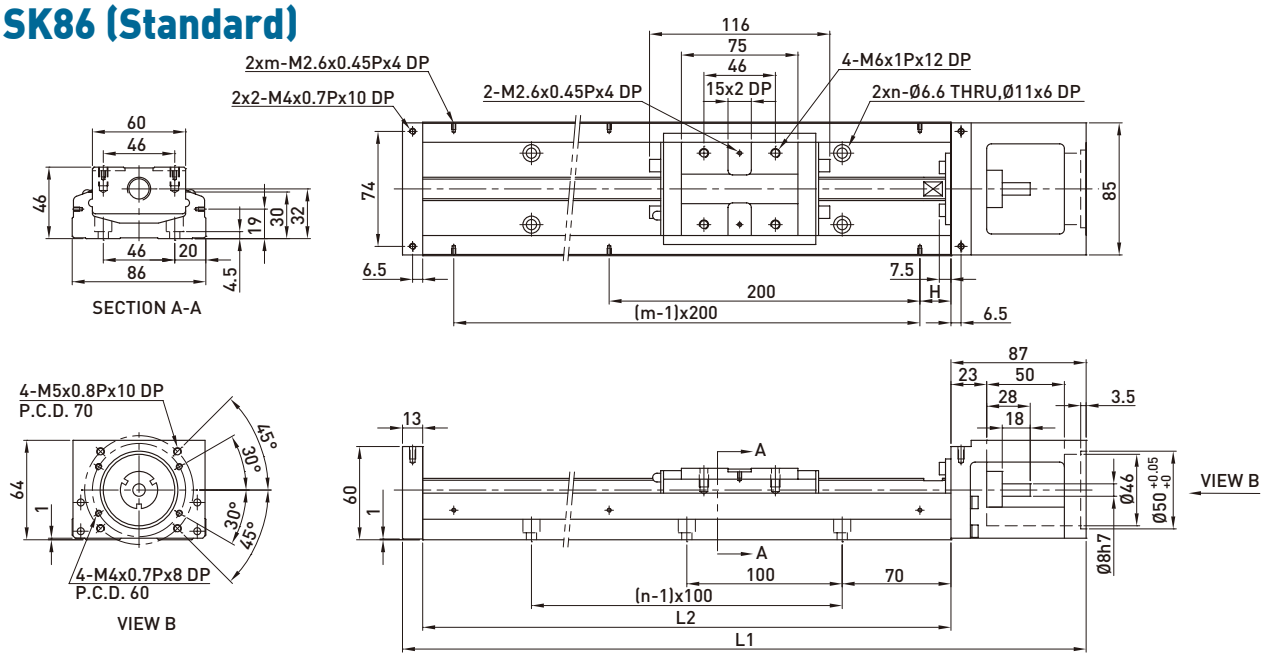

Rail Length L2 (mm)	Total Length L1 (mm)	Maximum Stroke (mm)		H (mm)	n	m	Mass (kg)	
		A1 Block	A2 Block				A1 Block	A2 Block
340	440	216.5	108.5	70	3	2	5.7	6.5
440	540	316.5	208.5	20	4	3	6.9	7.7
540	640	416.5	308.5	70	5	3	8.0	8.8
640	740	516.5	408.5	20	6	4	9.2	10.0
740	840	616.5	508.5	70	7	4	10.4	11.2
940	1040	816.5	708.5	70	9	5	11.6	12.4

Note:Special ballscrew spindle end of 10 mm diameter is available, please contact hiwin if necessary.

SK86 (Light Duty)

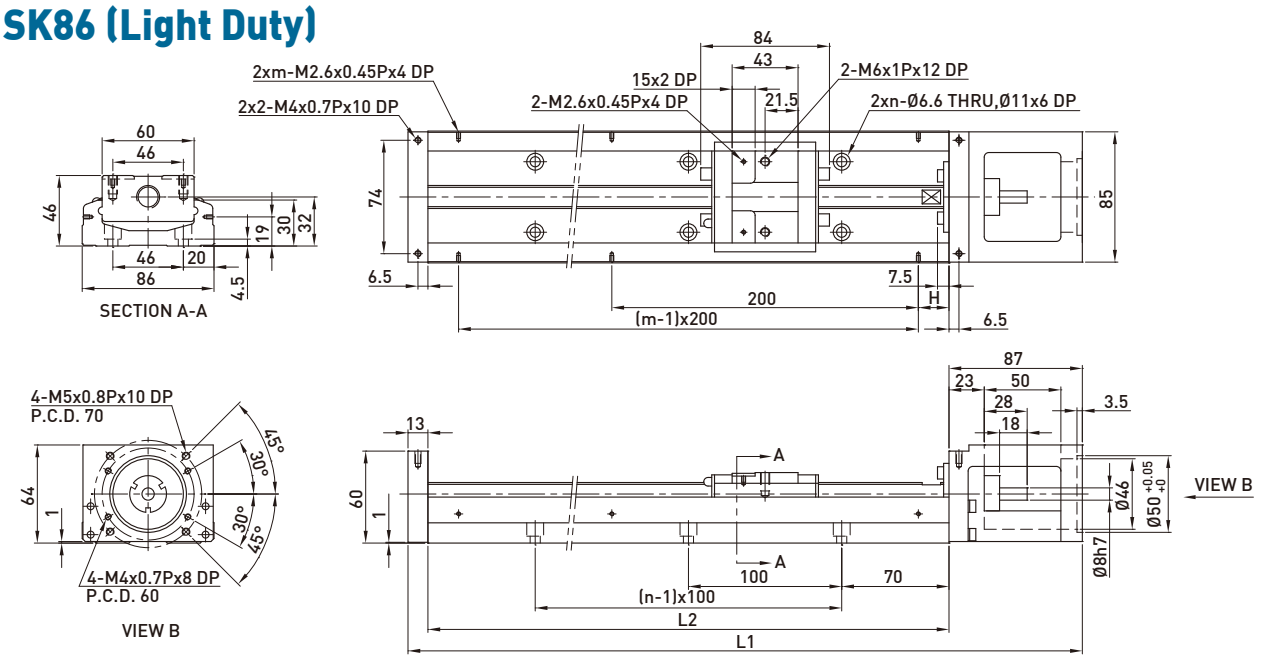

Rail Length L2 (mm)	Total Length L1 (mm)	Maximum Stroke (mm)		H (mm)	n	m	Mass (kg)	
		S1 Block	S2 Block				S1 Block	S2 Block
340	440	248.5	172.5	70	3	2	5.4	5.9
440	540	348.5	272.5	20	4	3	6.6	7.1
540	640	448.5	372.5	70	5	3	7.7	8.2
640	740	548.5	472.5	20	6	4	8.9	9.4
740	840	648.5	572.5	70	7	4	10.1	10.6
940	1040	848.5	772.5	70	9	5	11.3	11.8

SK86D (Standard)

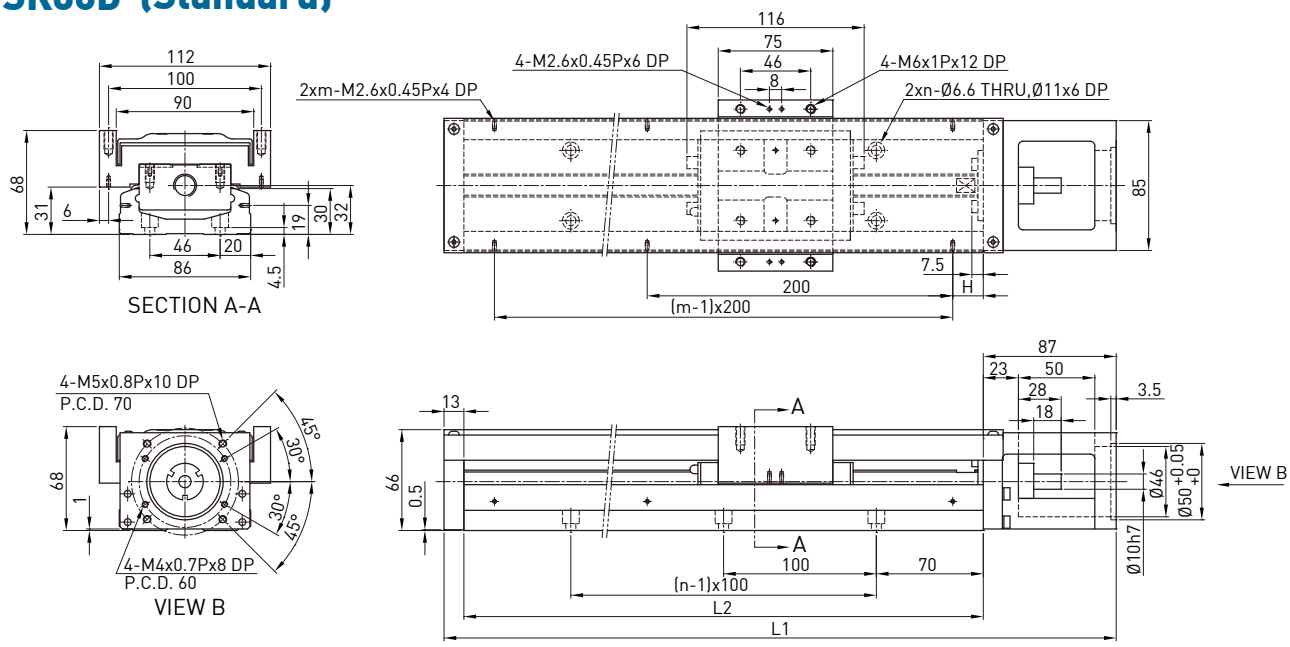

Rail Length L2 (mm)	Total Length L1 (mm)	Maximum Stroke (mm)		H (mm)	n	m	Mass (kg)	
		A1 Block	A2 Block				A1 Block	A2 Block
340	440	216.5	108.5	70	3	2	6.5	7.3
440	540	316.5	208.5	20	4	3	7.8	8.6
540	640	416.5	308.5	70	5	3	9.0	9.8
640	740	516.5	408.5	20	6	4	10.3	11.3
740	840	616.5	508.5	70	7	4	11.6	12.4
940	1040	816.5	708.5	70	9	5	13.0	13.8

SK86D (Light Duty)

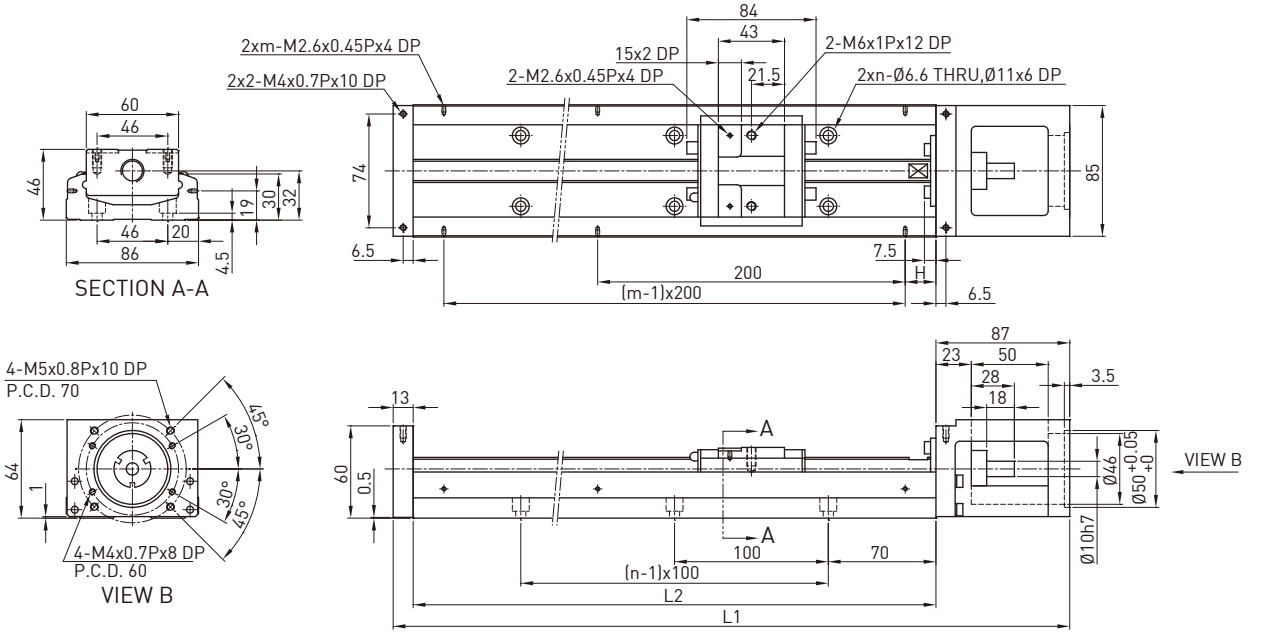

Rail Length L2 (mm)	Total Length L1 (mm)	Maximum Stroke (mm)		H (mm)	n	m	Mass (kg)	
		S1 Block	S2 Block				S1 Block	S2 Block
340	440	248.5	172.5	70	3	2	5.4	5.9
440	540	348.5	272.5	20	4	3	6.6	7.1
540	640	448.5	372.5	70	5	3	7.7	8.2
640	740	548.5	472.5	20	6	4	8.9	9.4
740	840	648.5	572.5	70	7	4	10.1	10.6
940	1040	848.5	772.5	70	9	5	11.3	11.8

2.8.2 With cover

SK60 (Standard)

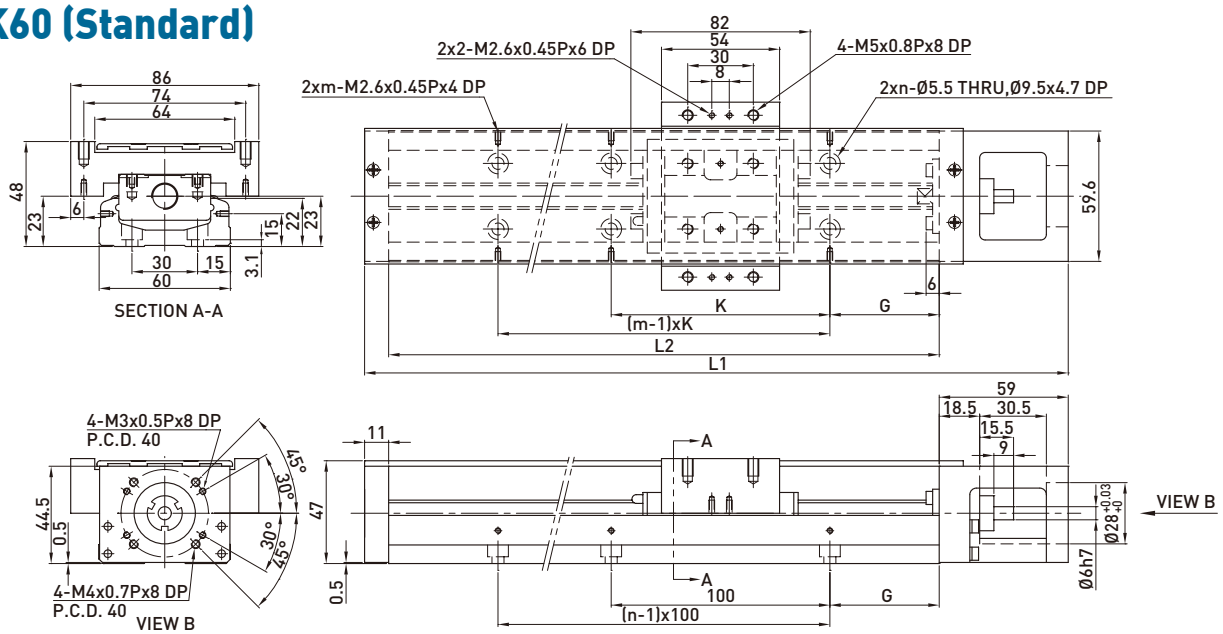

Rail Length L2 (mm)	Total Length L1 (mm)	Maximum Stroke (mm)		G (mm)	K (mm)	n	m	Mass (kg)	
		A1 Block	A2 Block					A1 Block	A2 Block
150	220	60	-	25	100	2	2	1.7	-
200	270	110	-	50	100	2	2	2.1	-
300	370	210	135	50	200	3	2	2.7	3.0
400	470	310	235	50	100	4	4	3.3	3.6
500	570	410	335	50	200	5	3	3.9	4.2
600	670	510	435	50	100	6	6	4.6	5.0

Note:Special ballscrew spindle end of 8 mm diameter is available, please contact hiwin if necessary.

SK60 (Light Duty)

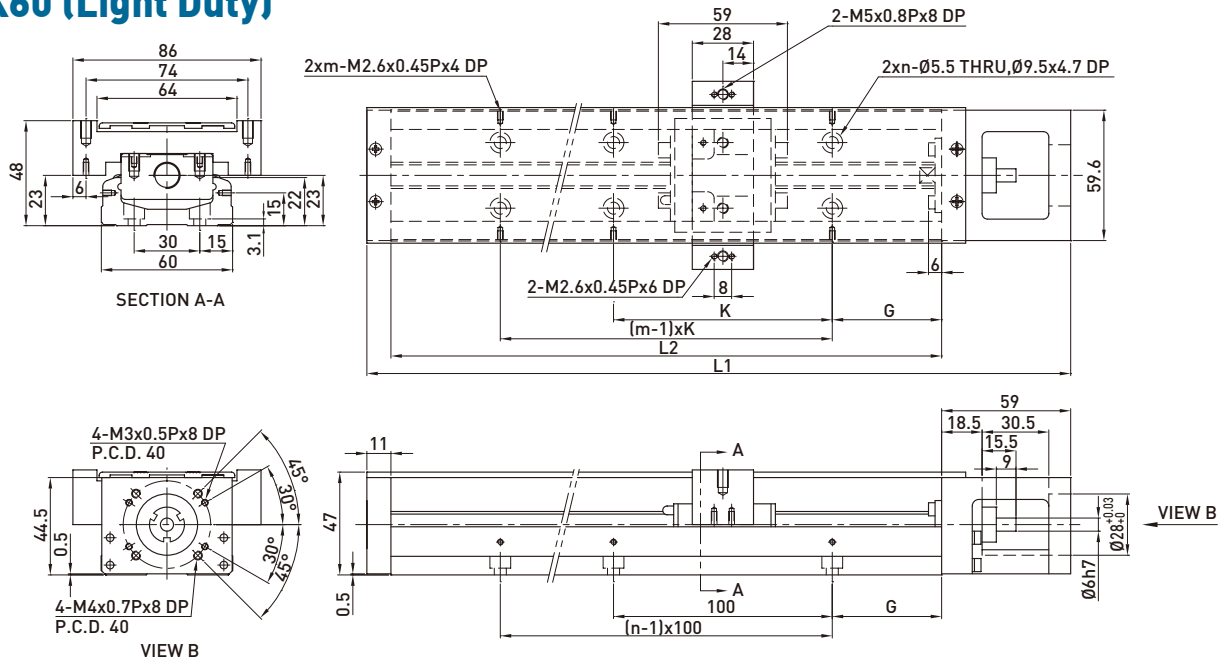

Rail Length L2 (mm)	Total Length L1 (mm)	Maximum Stroke (mm)		G (mm)	K (mm)	n	m	Mass (kg)	
		S1 Block	S2 Block					S1 Block	S2 Block
150	220	85	34	25	100	2	2	1.6	1.8
200	270	135	84	50	100	2	2	1.9	2.1
300	370	235	184	50	200	3	2	2.5	2.7
400	470	335	284	50	100	4	4	3.1	3.3
500	570	435	384	50	200	5	3	3.7	3.9
600	670	535	484	50	100	6	6	4.4	4.6

SK60D (Standard)

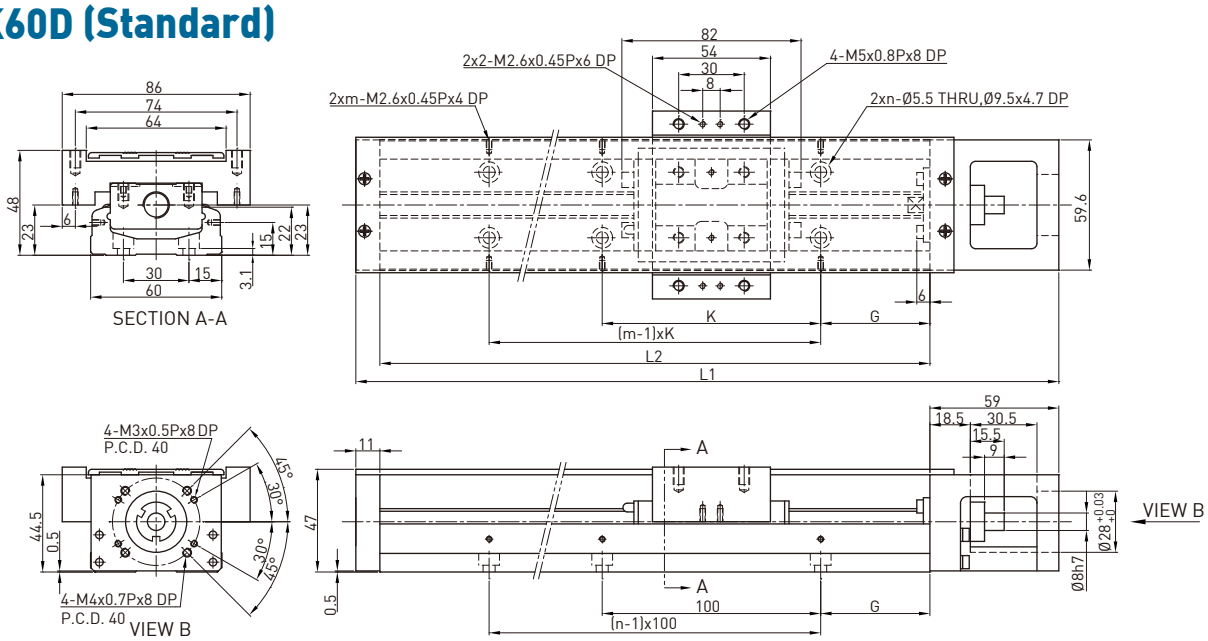

Rail Length L2 (mm)	Total Length L1 (mm)	Maximum Stroke (mm)		G (mm)	K (mm)	n	m	Mass (kg)	
		A1 Block	A2 Block					A1 Block	A2 Block
150	220	60	-	25	100	2	2	1.7	-
200	270	110	-	50	100	2	2	2.1	-
300	370	210	135	50	200	3	2	2.7	3.0
400	470	310	235	50	100	4	4	3.3	3.6
500	570	410	335	50	200	5	3	3.9	4.2
600	670	510	435	50	100	6	6	4.6	5.0

SK60D (Light Duty)

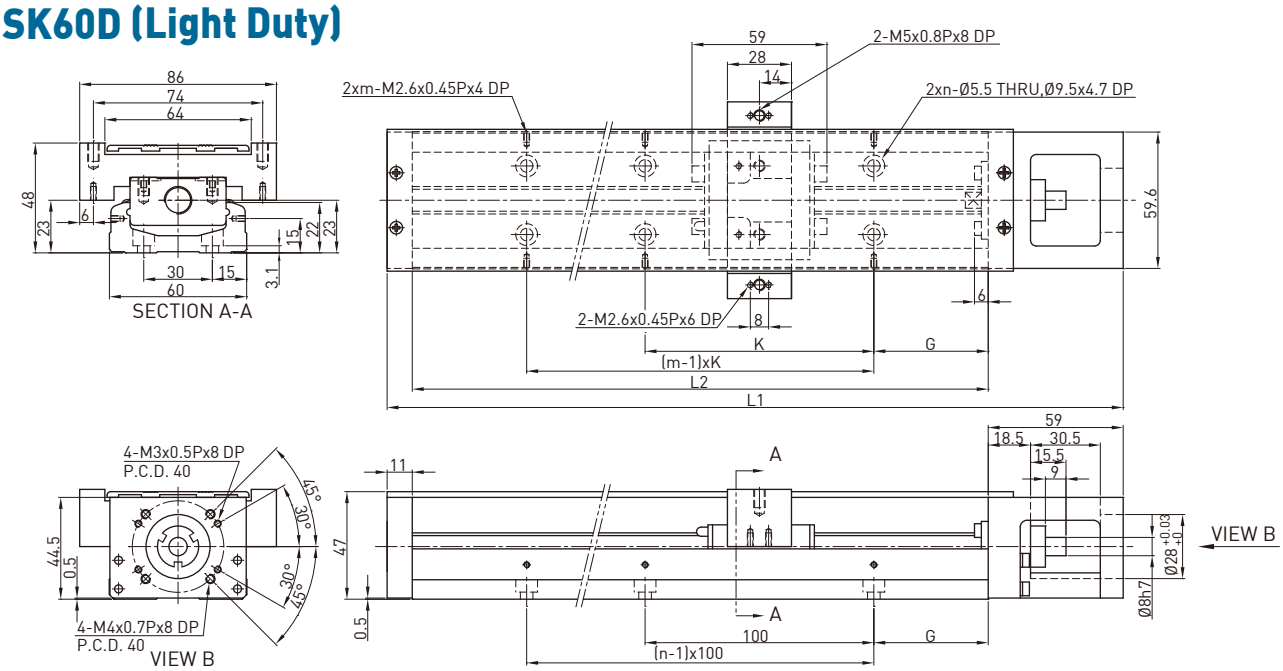

Rail Length L2 (mm)	Total Length L1 (mm)	Maximum Stroke (mm)		G (mm)	K (mm)	n	m	Mass (kg)	
		S1 Block	S2 Block					S1 Block	S2 Block
150	220	85	34	25	100	2	2	1.6	1.8
200	270	135	84	50	100	2	2	1.9	2.1
300	370	235	184	50	200	3	2	2.5	2.7
400	470	335	284	50	100	4	4	3.1	3.3
500	570	435	384	50	200	5	3	3.7	3.9
600	670	535	484	50	100	6	6	4.4	4.6

SK86 (Standard)

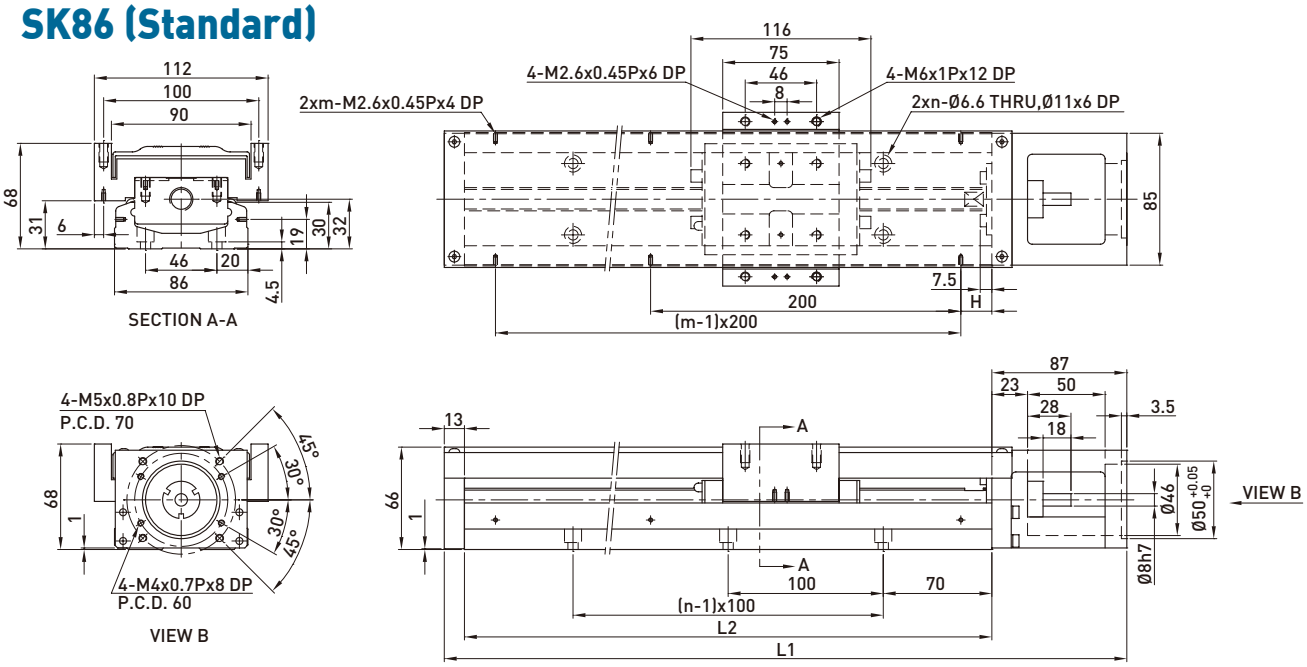

Rail Length L2 (mm)	Total Length L1 (mm)	Maximum Stroke (mm)		H (mm)	n	m	Mass (kg)	
		A1 Block	A2 Block				A1 Block	A2 Block
340	440	216.5	108.5	70	3	2	6.5	7.3
440	540	316.5	208.5	20	4	3	7.8	8.6
540	640	416.5	308.5	70	5	3	9.0	9.8
640	740	516.5	408.5	20	6	4	10.3	11.3
740	840	616.5	508.5	70	7	4	11.6	12.4
940	1040	816.5	708.5	70	9	5	13.0	13.8

Note:Special ballscrew spindle end of 10 mm diameter is available, please contact hiwin if necessary.

SK86 (Light Duty)

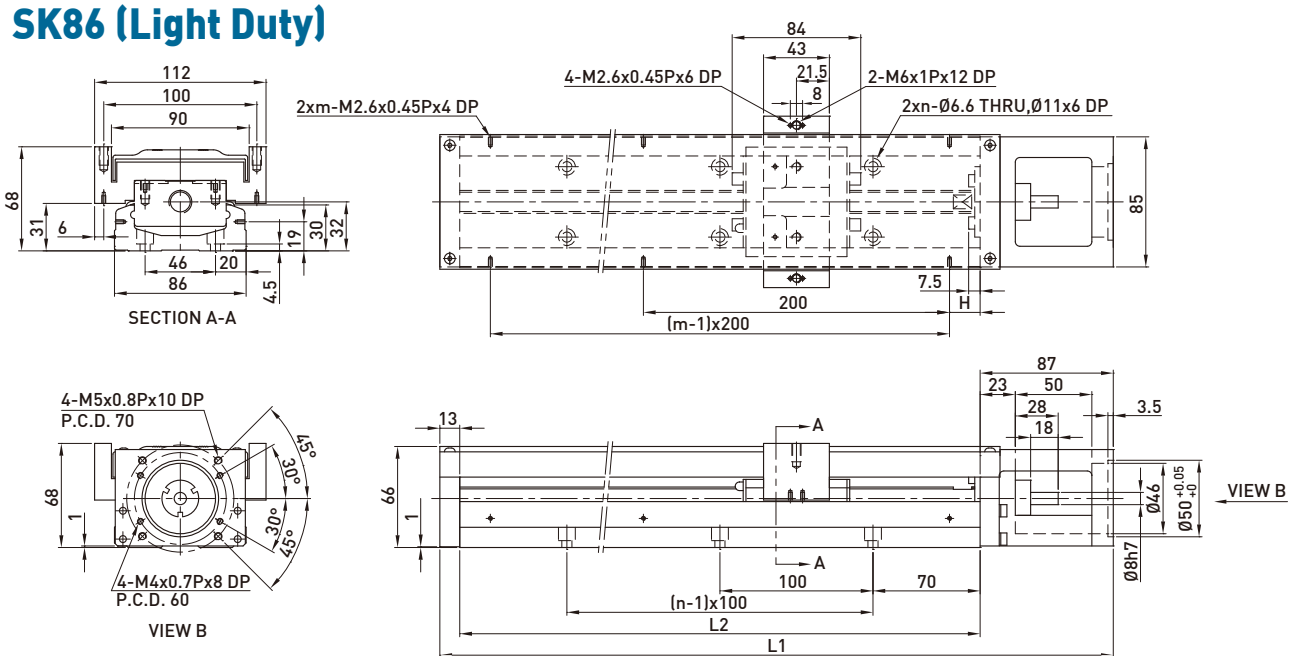

Rail Length L2 (mm)	Total Length L1 (mm)	Maximum Stroke (mm)		H (mm)	n	m	Mass (kg)	
		S1 Block	S2 Block				S1 Block	S2 Block
340	440	248.5	172.5	70	3	2	6.3	7.1
440	540	348.5	272.5	20	4	3	7.6	8.4
540	640	448.5	372.5	70	5	3	8.8	9.6
640	740	548.5	472.5	20	6	4	10.1	11.1
740	840	648.5	572.5	70	7	4	11.4	12.2
940	1040	848.5	772.5	70	9	5	12.8	13.6

SK86D (Standard)

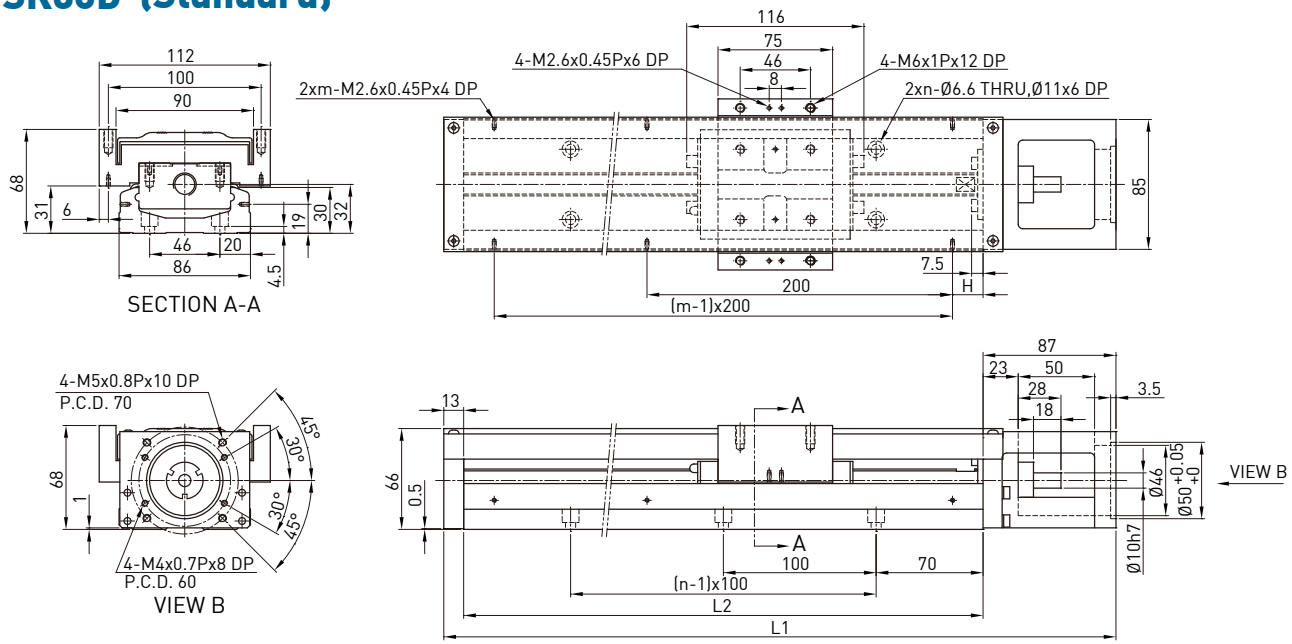

Rail Length L2 (mm)	Total Length L1 (mm)	Maximum Stroke (mm)		H (mm)	n	m	Mass (kg)	
		A1 Block	A2 Block				A1 Block	A2 Block
340	440	216.5	108.5	70	3	2	6.5	7.3
440	540	316.5	208.5	20	4	3	7.8	8.6
540	640	416.5	308.5	70	5	3	9.0	9.8
640	740	516.5	408.5	20	6	4	10.3	11.3
740	840	616.5	508.5	70	7	4	11.6	12.4
940	1040	816.5	708.5	70	9	5	13.0	13.8

SK86D (Light Duty)

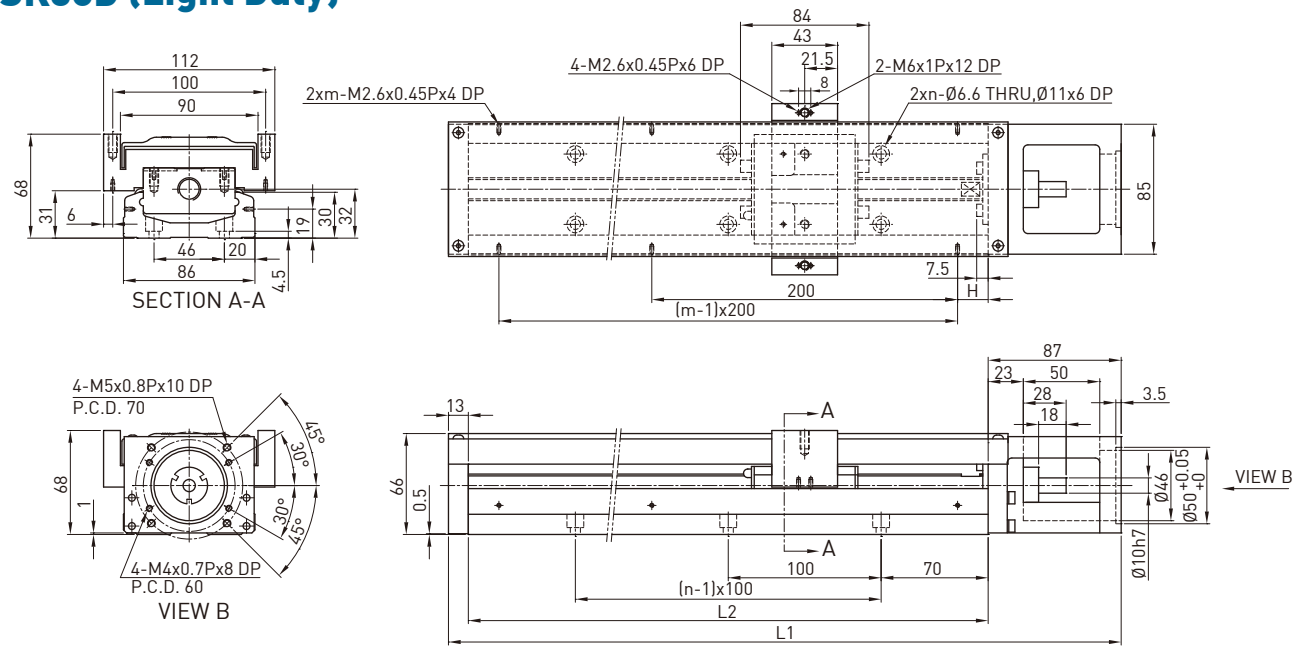

Rail Length L2 (mm)	Total Length L1 (mm)	Maximum Stroke (mm)		H (mm)	n	m	Mass (kg)	
		S1 Block	S2 Block				S1 Block	S2 Block
340	440	248.5	172.5	70	3	2	6.3	7.1
440	540	348.5	272.5	20	4	3	7.6	8.4
540	640	448.5	372.5	70	5	3	8.8	9.6
640	740	548.5	472.5	20	6	4	10.1	11.1
740	840	648.5	572.5	70	7	4	11.4	12.2
940	1040	848.5	772.5	70	9	5	12.8	13.6

3.9 Motor Housing and Motor Adaptor Flange

3.9.1 Motor Selection

HIWIN Mikrosystem Servo Motor

Motor Output	Motor	Weight (kg)	Flange Selection		+Brake Weight (kg)	Drive	Weight (kg)	Remarks
			SK60	SK86				
50W	FRLS052□□A4□	0.45	F2	F3	0.58	D2T	1.25	220V
100W	FRLS102□□A4□	0.6	F2	F3	0.76			220V
200W	FRLS202□□06□	1	-	F0	1.5			220V
400W	FRLS402□□06□	1.45	-	F0	1.86			220V
750W	FRMS752□□08□	2.66	-	-	3.32			220V

Mitsubishi Servo Motor

Motor Output	Motor	Weight (kg)	Flange Selection		+Brake Weight (kg)	Drive	Weight (kg)	Remarks
			SK60	SK86				
50W	HF-KP053	0.35	F1	F2	0.75	MR-J3S-10A	0.8	220V
100W	HF-KP13	0.56	F1	F2	0.89	MR-J3S-10A	0.8	220V
200W	HF-KP23	0.94	-	F0	1.6	MR-J3S-20A	0.8	220V
400W	HF-KP43	1.5	-	F0	2.1	MR-J3S-40A	1	220V

Panasonic Servo Motor

Motor Output	Motor	Weight (kg)	Flange Selection		+Brake Weight (kg)	Drive	Weight (kg)	Remarks
			SK60	SK86				
50W	MSMD5AZP1	0.32	F2	F3	0.53	MADDT1105	0.8	110V
50W	MSMD5AZP1	0.32	F2	F3	0.53	MADDT1205	0.8	220V
100W	MSMD011P1	0.47	F2	F3	0.68	MADDT1107	0.8	110V
100W	MSMD012P1	0.47	F2	F3	0.68	MADDT1205	0.8	220V
200W	MSMD021P1	0.82	-	F1	1.3	MADDT2110	1.1	110V
200W	MSMD022P1	0.82	-	F1	1.3	MADDT1207	0.8	220V
400W	MSMD041P1	1.2	-	F1	1.7	MADDT3120	1.5	110V
400W	MSMD042P1	1.2	-	F1	1.7	MADDT2210	1.1	220V
750W	MSMD082S1	2.3	-	F4	3.1	MADDT3520	1.5	220V

Yaskawa Servo Motor

Motor Output	Motor	Weight (kg)	Flange Selection		+Brake Weight (kg)	Drive	Weight (kg)	Remarks
			SK60	SK86				
50W	SGMAV-A5ADA61	0.3	F1	F2	-	SGDV-R70A01A	0.9	with key
50W	SGMAV-A5ADA2C	0.3	F1	F2	-	SGDV-R70A01A	0.9	no key
50W	SGMAV-A5ADA21	0.3	F1	F2	0.75	SGDV-R70A01A	0.9	Mid inertia
100W	SGMAV-01ADA64	0.4	F1	F2	0.89	SGDV-R90A01A	0.9	-
200W	SGMAV-02ADA65	0.9	-	F0	1.6	SGDV-1R6A01A	0.9	-
400W	SGMAV-04ADA66	1.2	-	F0	2.1	SGDV-2R8A01A	1	-

Oriental Step Motor

Series	Model	Flange Selection		Built in Motor	Weight (kg)	Built in Drive	Weight (kg)
		SK60	SK86				
CSK 2 phase	CSK243-AP	F5	-	PK243-01A	0.21	CSD2109-P	0.12
	CSK244-AP	F5	-	PK244-01A	0.27	CSD2112-P	0.12
	CSK245-AP	F5	-	PK245-01A	0.35	CSD2112-P	0.12
	CSK264-AP	F4	F6	PK264-02A	0.45	CSD2120-P	0.12
	CSK266-AP	F4	F6	PK266-02A	0.7	CSD2120-P	0.12
	CSK268-AP	F4	F6	PK268-02A	1	CSD2120-P	0.12
CFKII 5 phase micro stepping	CFK543AP2	F5	-	PK543NAW	0.21	DFC5107P	0.2
	CFK544AP2	F5	-	PK544NAW	0.27	DFC5107P	0.2
	CFK545AP2	F5	-	PK545NAW	0.35	DFC5107P	0.2
	CFK564AP2	-	F5	PK564NAW	0.6	DFC5114P	0.2
	CFK566AP2	-	F5	PK566NAW	0.8	DFC5114P	0.2
	CFK569AP2	-	F5	PK569NAW	1.3	DFC5114P	0.2
	CFK566HAP2	-	F5	PK566HNAW	0.8	DFC5128P	0.22
	CKF569HAP2	-	F5	PK569HNAW	1.3	DFC5128P	0.22
UMK 2 phase	UMK243A	F5	-	PK243-01	0.21	UDK2109	0.47
	UMK244A	F5	-	PK244-01	0.27	UDK2112	0.47
	UMK245A	F5	-	PK245-01	0.35	UDK2112	0.47
	UMK264A	F4	F6	PK264-02	0.45	UDK2120	0.47
	UMK266A	F4	F6	PK266-02	0.7	UDK2120	0.47
	UMK268A	F4	F6	PK268-02	1	UDK2120	0.47
RK 5 phase	RK543AA	F5	-	PK543W	0.25	RKD507-A	0.4
	RK544AA	F5	-	PK544W	0.3	RKD507-A	0.4
	RK545AA	F5	-	PK545W	0.4	RKD507-A	0.4
	RK566AA	-	F5	PK566W	0.8	RKD514L-A	0.85
	RK569AA	-	F5	PK569W	1.3	RKD514L-A	0.85

3.9.2 HIWIN AC Servo Motor & Drive Selection Model Comparison Table

SK60

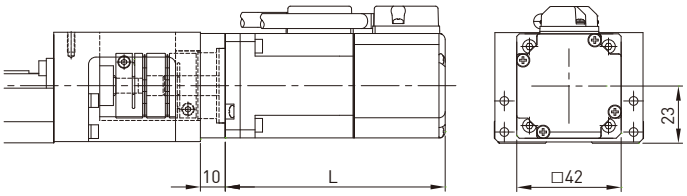

Model selection	Rated Output	Brakes	Flange	L(mm)	Weight (kg)*
M05□	50W	NO	F2	88.5	0.51
K05□		YES		117	0.64
M10□	100W	NO		110.5	0.66
K10□		YES		139	0.82

SK86

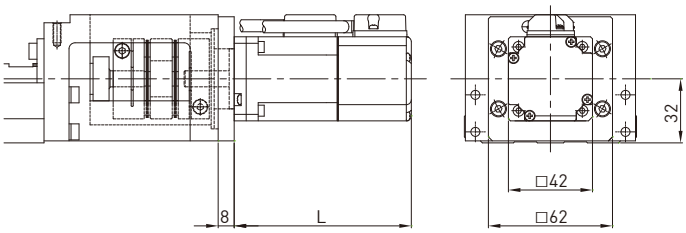

Model selection	Rated Output	Brakes	Flange	L(mm)	Weight (kg)*
M05□	50W	NO	F3	88.5	0.65
K05□		YES		117	0.78
M10□	100W	NO		110.5	0.80
K10□		YES		139	0.96

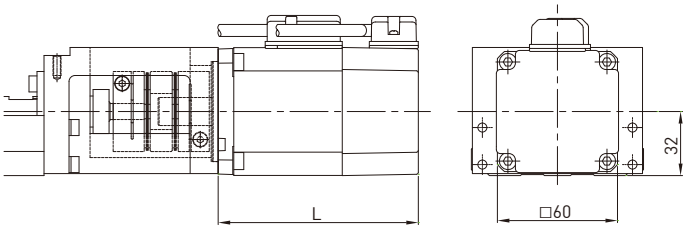

Model selection	Rated Output	Brakes	Flange	L(mm)	Weight (kg)*
M20□	200W	NO	F0	100	1.13
K20□		YES		133	1.63
M40□	400W	NO		121.5	1.58
K40□		YES		154.5	1.99

*1. The weight is the total weight of the motor, flange and coupling. It does not include the weight of the single-axis robot.
2. Motor and drive specification ref. catalog P.167

3.9.3 Motor Housing and Motor Adaptor Flange

SK60

Motor Housing F0

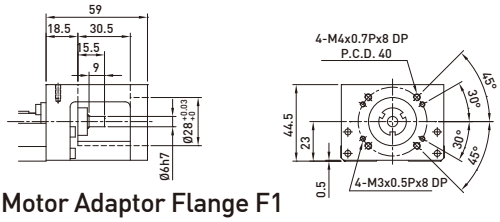

Motor Adaptor Flange F1

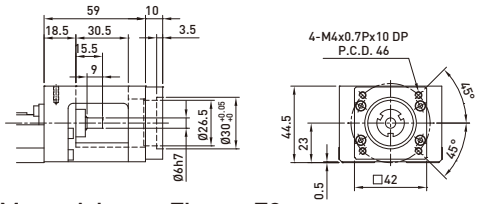

Motor Adaptor Flange F2

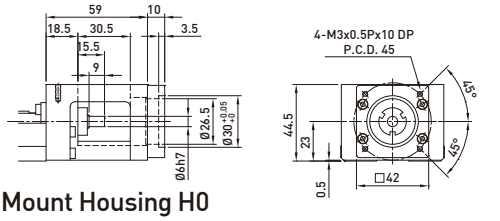

Mount Housing H0

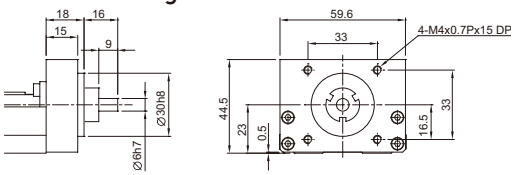

Motor Adaptor Flange F3

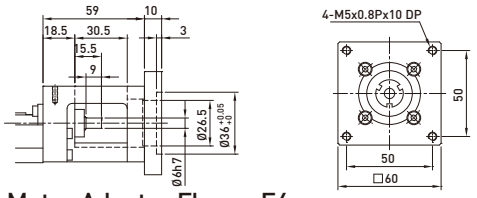

Motor Adaptor Flange F4

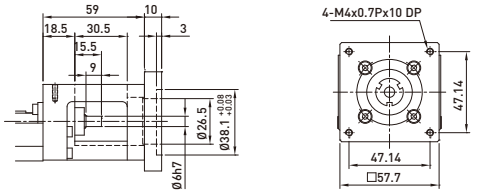

Motor Adaptor Flange F5

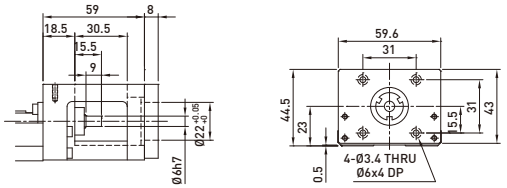

Mount Housing H1

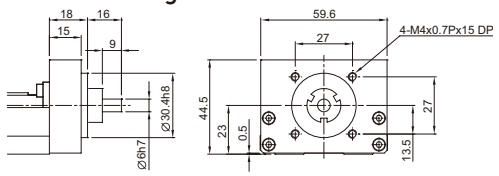

SK86

Motor Housing F0

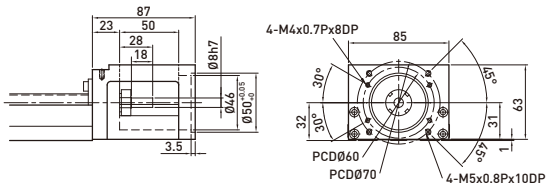

Motor Adaptor Flange F1

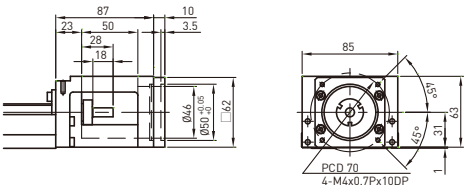

Motor Adaptor Flange F2

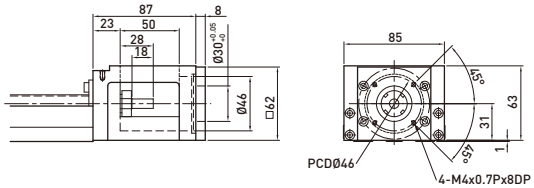

Motor Adaptor Flange F3

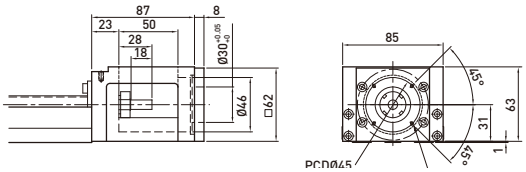

Motor Adaptor Flange F4

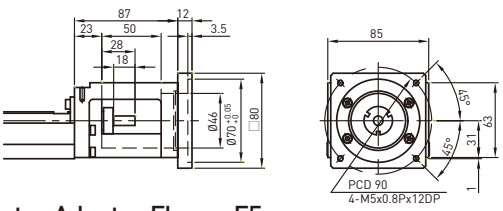

Motor Adaptor Flange F5

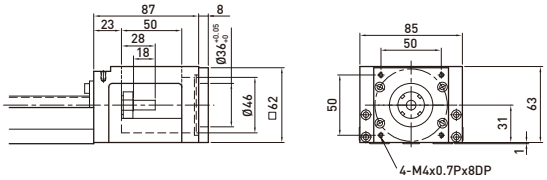

Motor Adaptor Flange F6

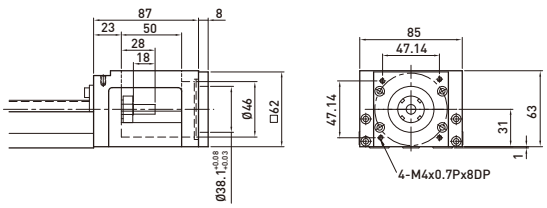

Mount Housing H0

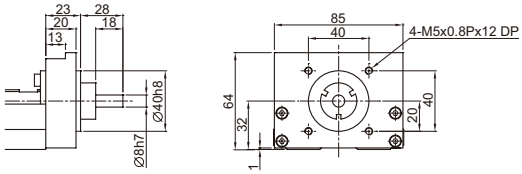

3.10 Switch

Switch rail

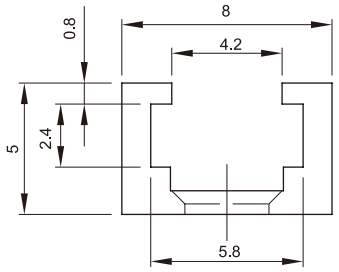

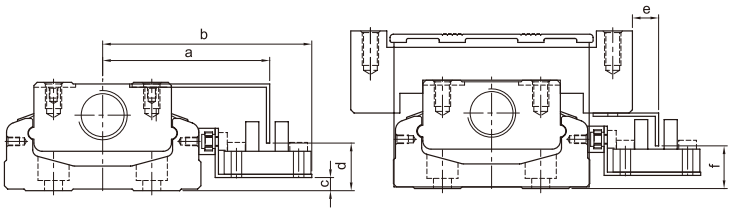

Nominal Width	a	b	c	d	e	f
SK60	51	63.8	4	14.5	8	13
SK86	63.5	76.7	8	18	8	18

Switch S1 : Omron EE-SX671

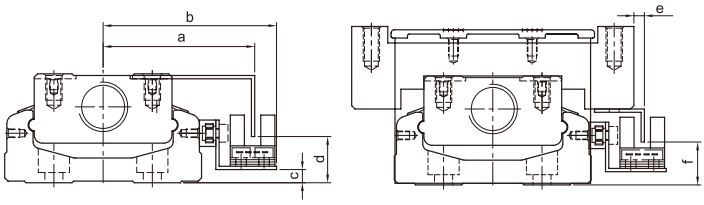

Nominal Width	a	b	c	d	e	f
SK60	46.2	52.8	4	14	3.2	13
SK86	59	65.7	8	18	3	18

Switch S2 : Omron EE-SX674

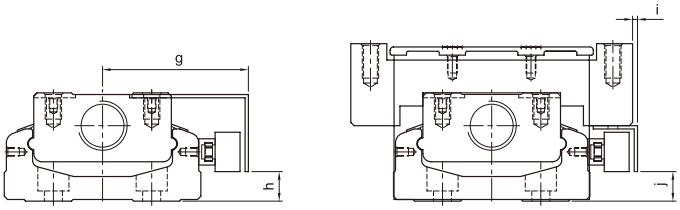

Nominal Width	g	h	i	j
SK60	44.5	9	2	9
SK86	57	13	1	13

Switch S3, S4 : PANASONIC GX-F12A, PANASONIC GX-F12A-P

Single-Axis Robot
4. KC Series

The HIWIN KC industrial robot integrates a ballscrew and guideway into a single modularized unit. With a ballscrew driven block traveling on a light weight optimized U-rail, this device offers high accuracy and efficiency, compact size, and fast installation.

4.1 Features

◎ Light Weight
◎ Easy Installation
◎ High Repeatability

4.2 Applications

◎ Pick and Place
◎ Automatic Inspection
◎ Assembly Machine

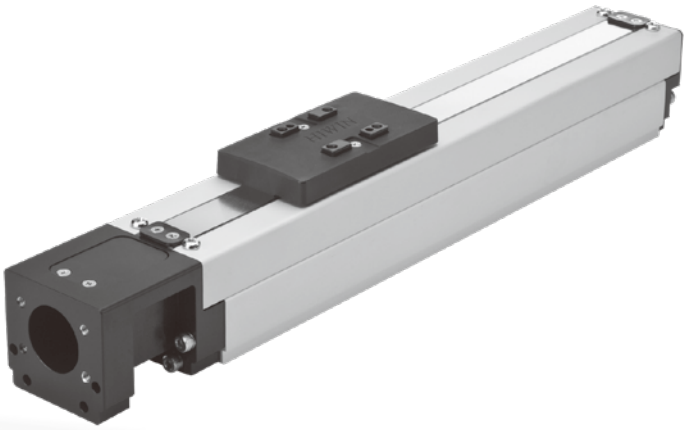

4.3 Model Number of KC Series

KC	60	10	P	E	-	400	E	A	E	F0	U	S1	M051

KC Stage

Nominal Width:
30, 40, 50, 60

BS lead (mm):
KC 30 : 1, 2
KC 40 : 1, 5
KC 50 : 5, 10
KC 60 : 5, 10

Accuracy grade:
P:Precision, C:Standard

E:Ballscrew Special Order
None:Standard Type

Effective Stroke (mm):
KC30 : 50-150
KC40 : 50-150
KC50 : 50-250
KC60 : 50-600

E:Bottom Case Special Order
None:Standard Type

Motor specification:
ref. catalof P.167
M: customer specified
None: Without Motor

Limit Switch
S0: Increase the switch rail
S1: OMRON SX671
S2: OMRON SX674
S3: Panasonic GX-F12A
S4: Panasonic GX-F12A-P
SE: Customer Assign SPEC
None:Without Sensor

U:Without Cover
None:Standard cover

Motor Flange Type:
motor adaptor flange
ref. catalog last page
FE:Special Order

E:Slider Special Order
None:Standard Type

Slider Type:
A:Standard Type

4.4 Precision

◎ Repeatability:

C：Standard Grade =±0.02mm　P：Precision Grade =±0.01mm

※Attention: The KC series does not indicate absolute positional accuracy.

◎ Running Parallelism:

The Parallelism between module platform surface and module mounting surface is < 0.1 mm/m. Inspection distance is twice the width of the aluminum base, method as follows:

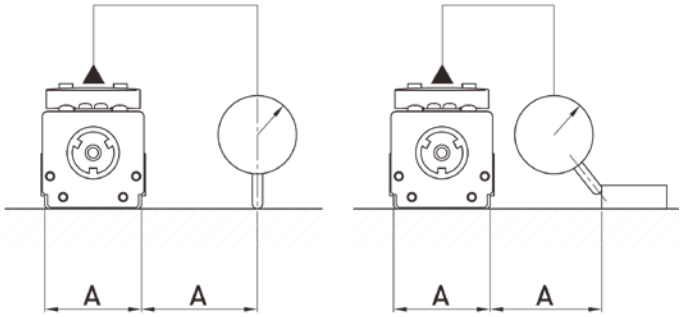

※Attention：Recommended flatness of installation plane is ≤ 0.05mm.

4.5 Reference

Speed & load relation diagrams:

Diagrams are actual test results based on the following assumptions. If used under different conditions, please contact HIWIN.

◎ Assumed travel life: 5,000Km
◎ Acceleration: 0.3G (0.2G calculated for lead=1mm).
◎ Stroke: 100mm
◎ Center of Gravity is located in the nominal direction on 0.5x width (w) of bottom case.

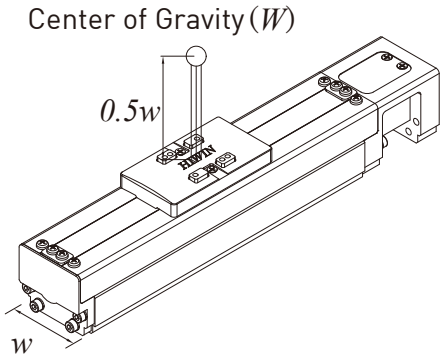

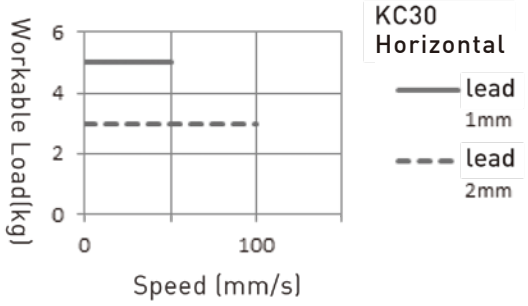

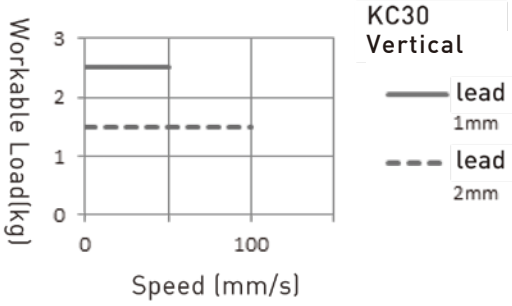

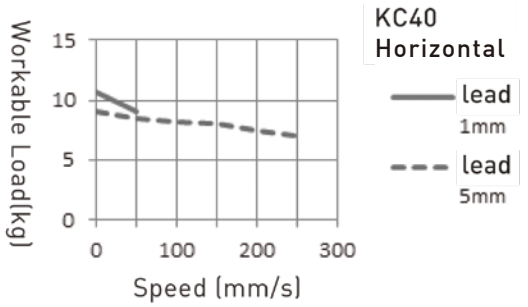

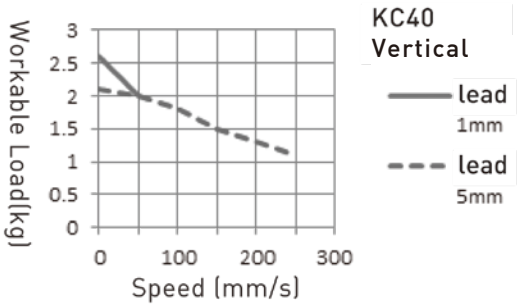

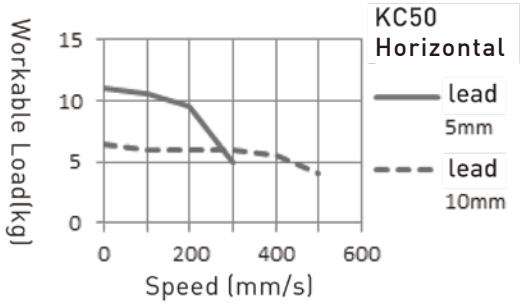

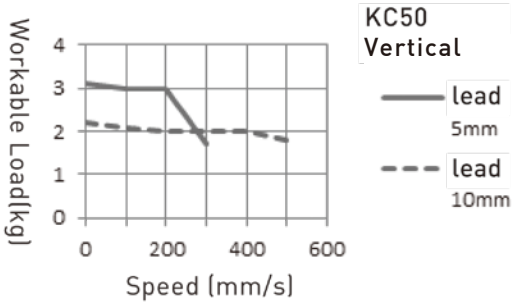

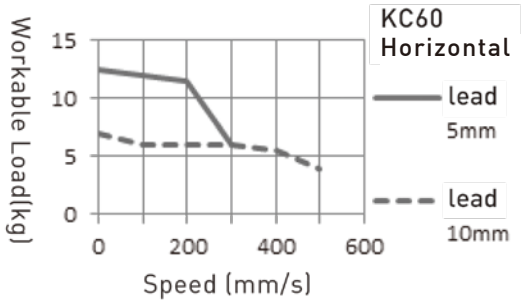

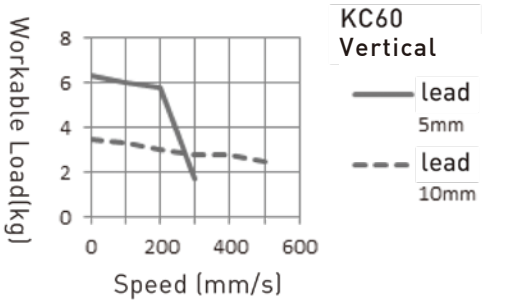

4.6 KC Series

KC30

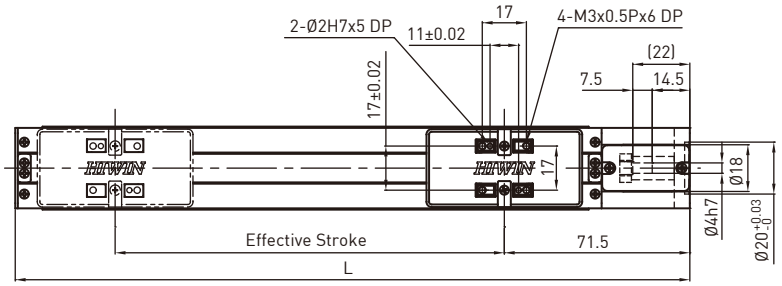

Standard Type

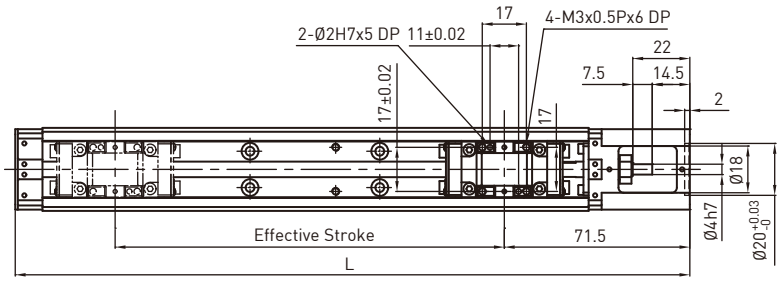

Without Cover

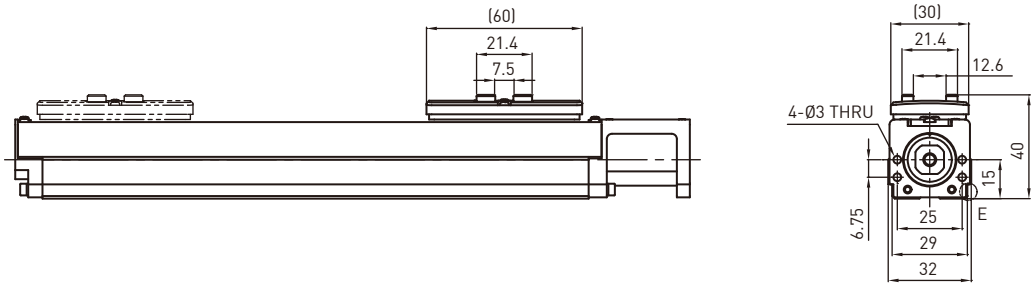

Standard Type

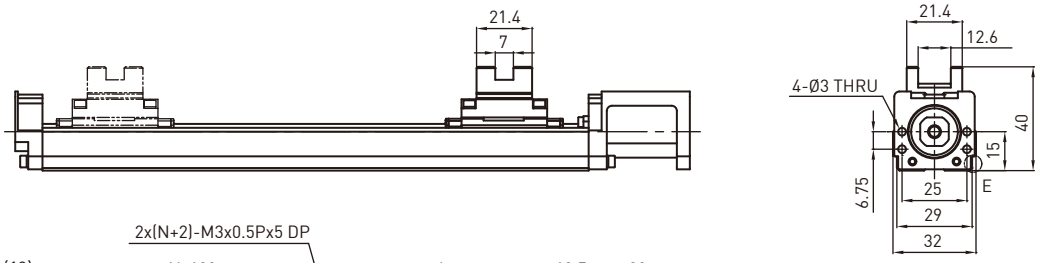

Without Cover

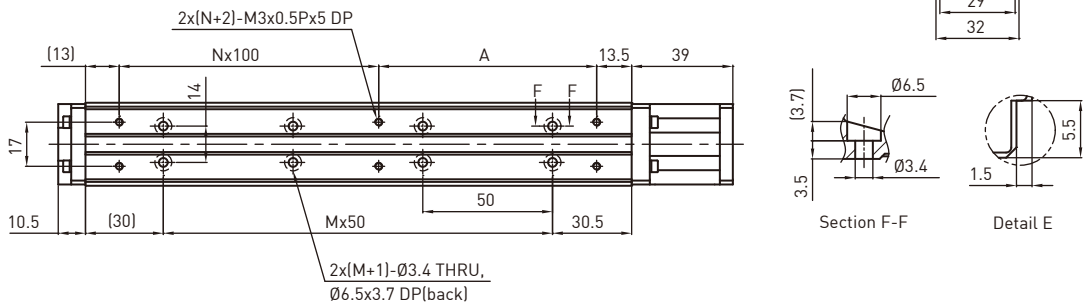

Effective Stroke (mm)	L	A	M	N	Weight (kg)	W/O Cover WT. (kg)
50	160	84	1	0	0.28	0.24
100	210	34	2	1	0.34	0.3
150	260	84	3	1	0.4	0.36

Note:Special ballscrew spindle end of 3 mm diameter is available, please contact hiwin if necessary.

KC40

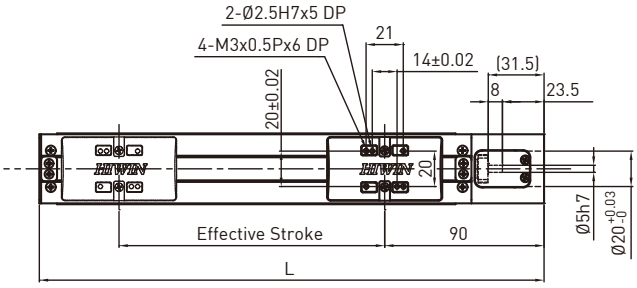

Standard Type

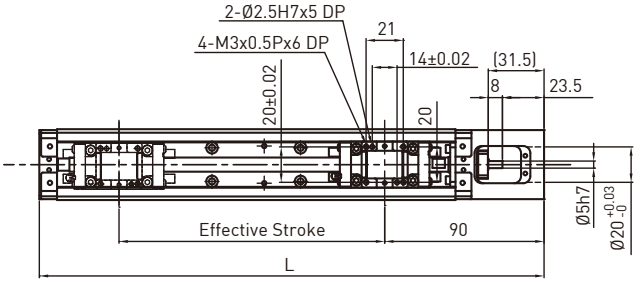

Without Cover

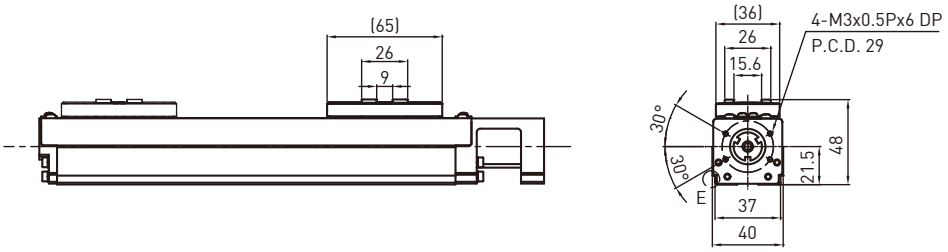

Standard Type

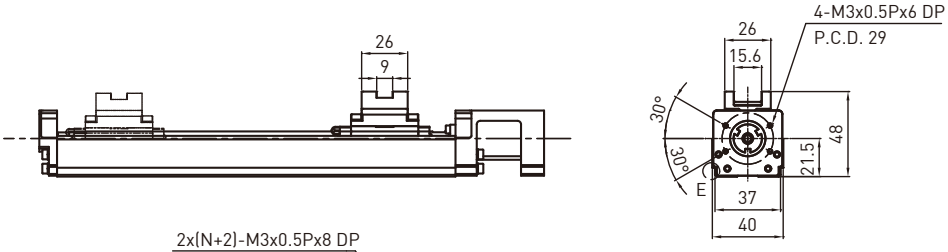

Without Cover

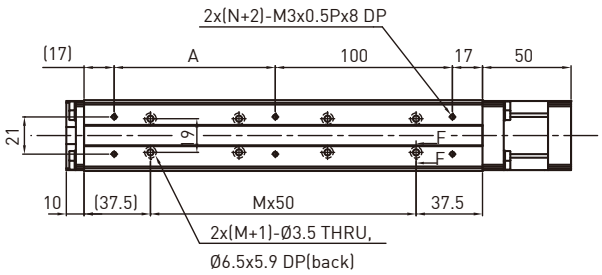

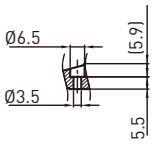

Section F-F

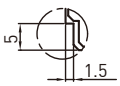

Detail E

Effective Stroke (mm)	L	A	M	N	Weight (kg)	W/O Cover WT. (kg)
50	185	91	1	0	0.6	0.5
100	235	41	2	1	0.7	0.6
150	285	91	3	1	0.8	0.7
200	335	41	4	2	0.9	0.8

Note:Special ballscrew spindle end of 4 mm diameter is available, please contact hiwin if necessary.

KC40 Motor side mount (Left)

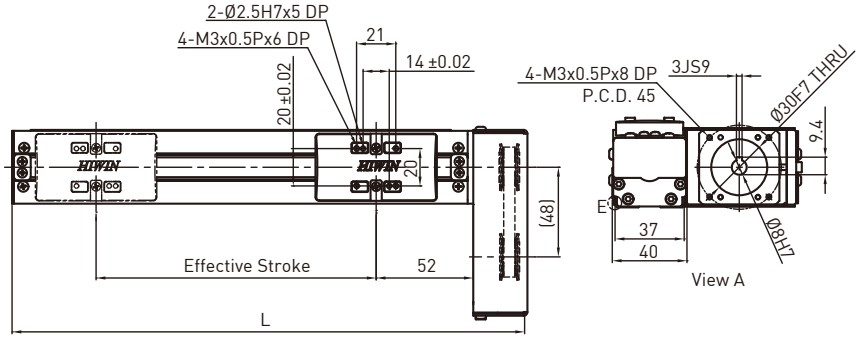

Standard Type

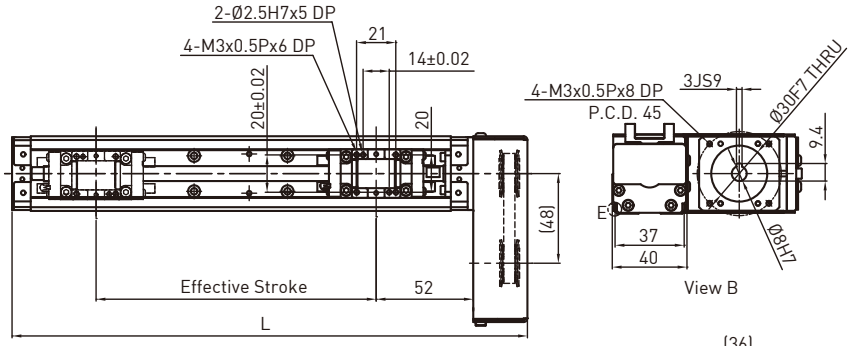

Without Cover

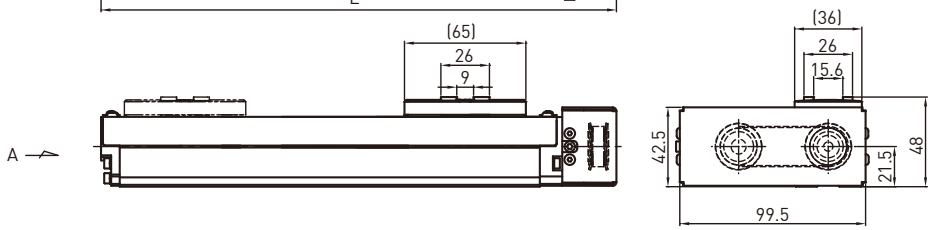

Standard Type

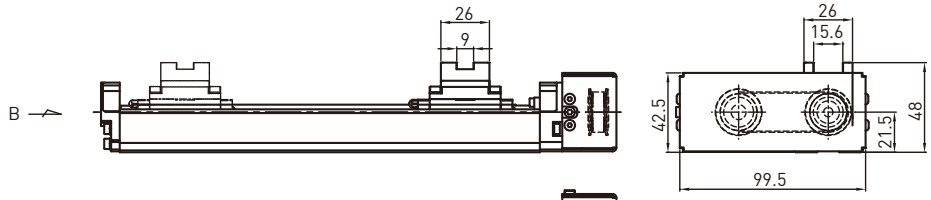

Without Cover

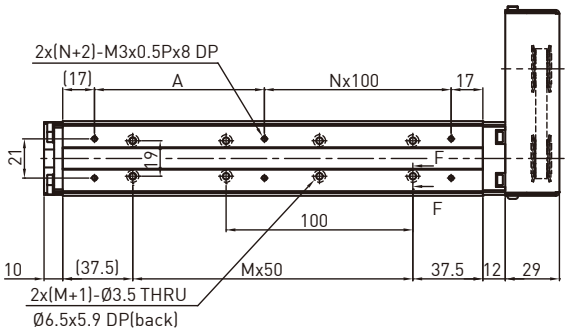

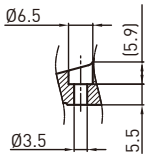

Section F-F

Detail E

Effective Stroke (mm)	L	A	M	N	Weight (kg)	W/O Cover WT. (kg)
50	174.5	91	1	0	0.7	0.6
100	224.5	41	2	1	0.8	0.7
150	274.5	91	3	1	0.9	0.8
200	324.5	41	4	2	1	0.9

KC40 Motor side mount (right)

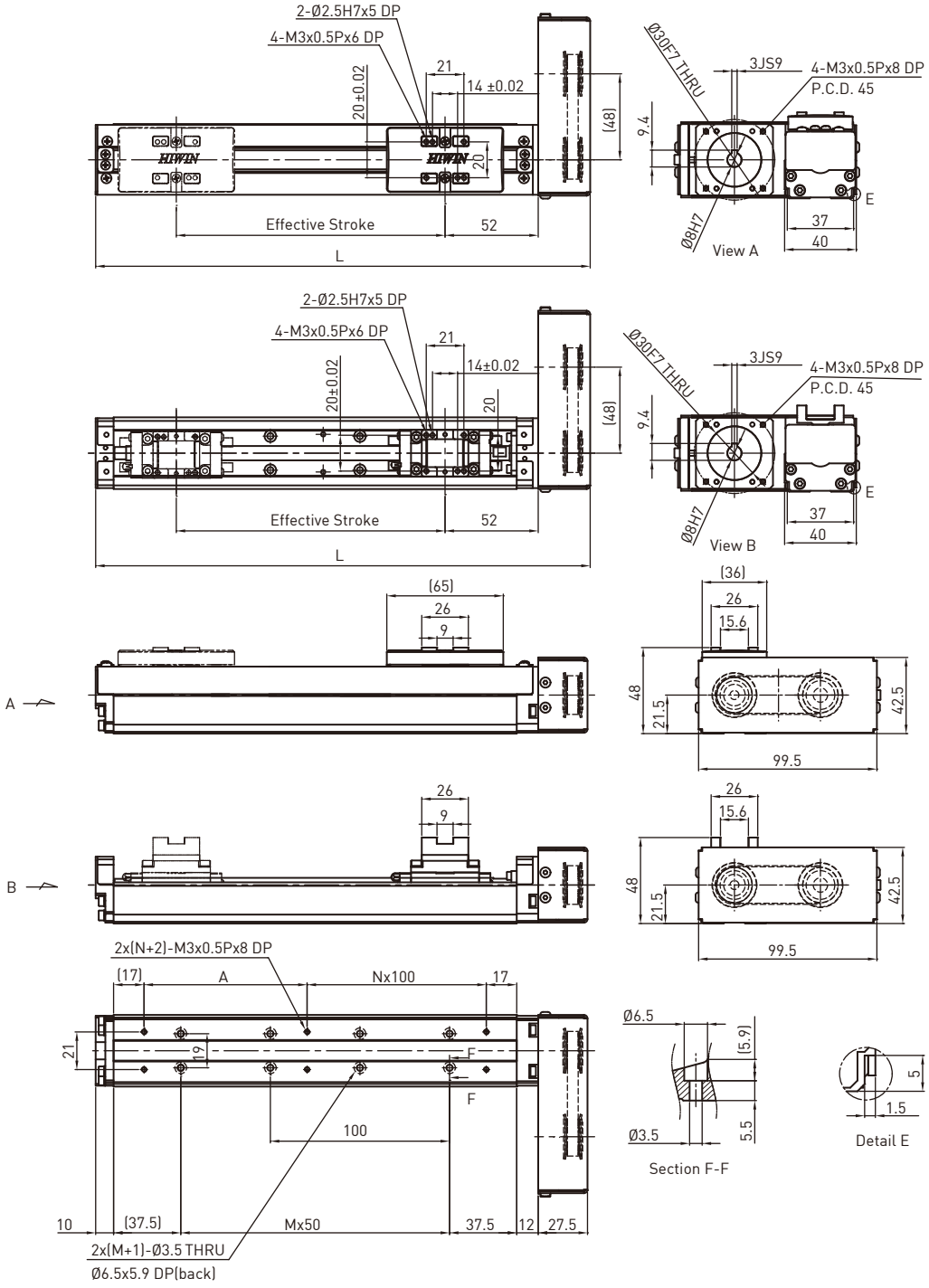

Effective Stroke (mm)	L	A	M	N	Weight (kg)	W/O Cover WT. (kg)
50	174.5	91	1	0	0.7	0.6
100	224.5	41	2	1	0.8	0.7
150	274.5	91	3	1	0.9	0.8
200	324.5	41	4	2	1	0.9

KC50

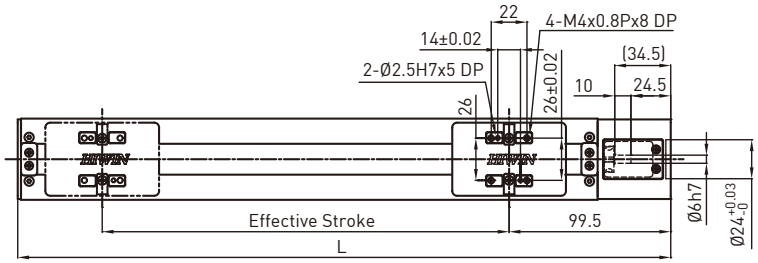

Standard Type

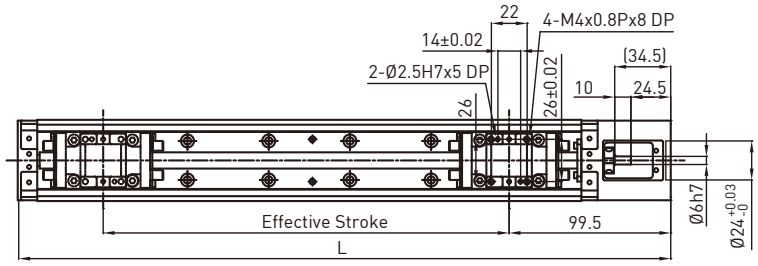

Without Cover

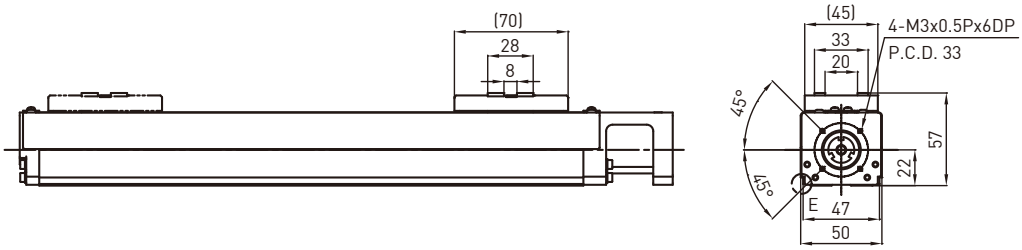

Standard Type

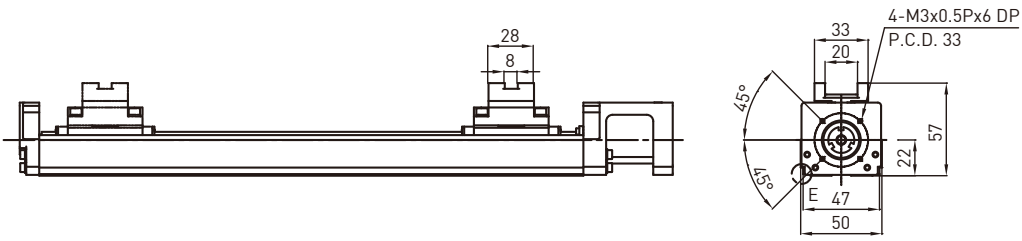

Without Cover

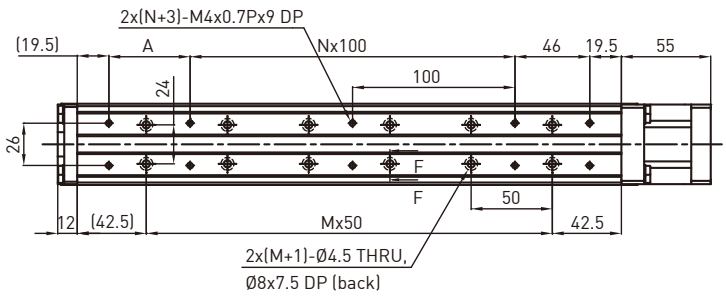

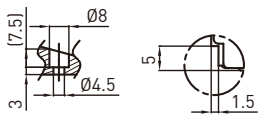

Section F-F

Detail E

Effective Stroke (mm)	L	A	M	N	Weight (kg)	W/O Cover WT. (kg)
50	202	50	1	0	1.1	1
100	252	100	2	0	1.2	1.1
150	302	50	3	1	1.4	1.2
200	352	100	4	1	1.5	1.4
250	402	50	5	2	1.6	1.5
300	452	100	6	2	1.8	1.6

Note:Special ballscrew spindle end of 5 mm diameter is available, please contact hiwin if necessary.

KC50 Motor side mount (Left)

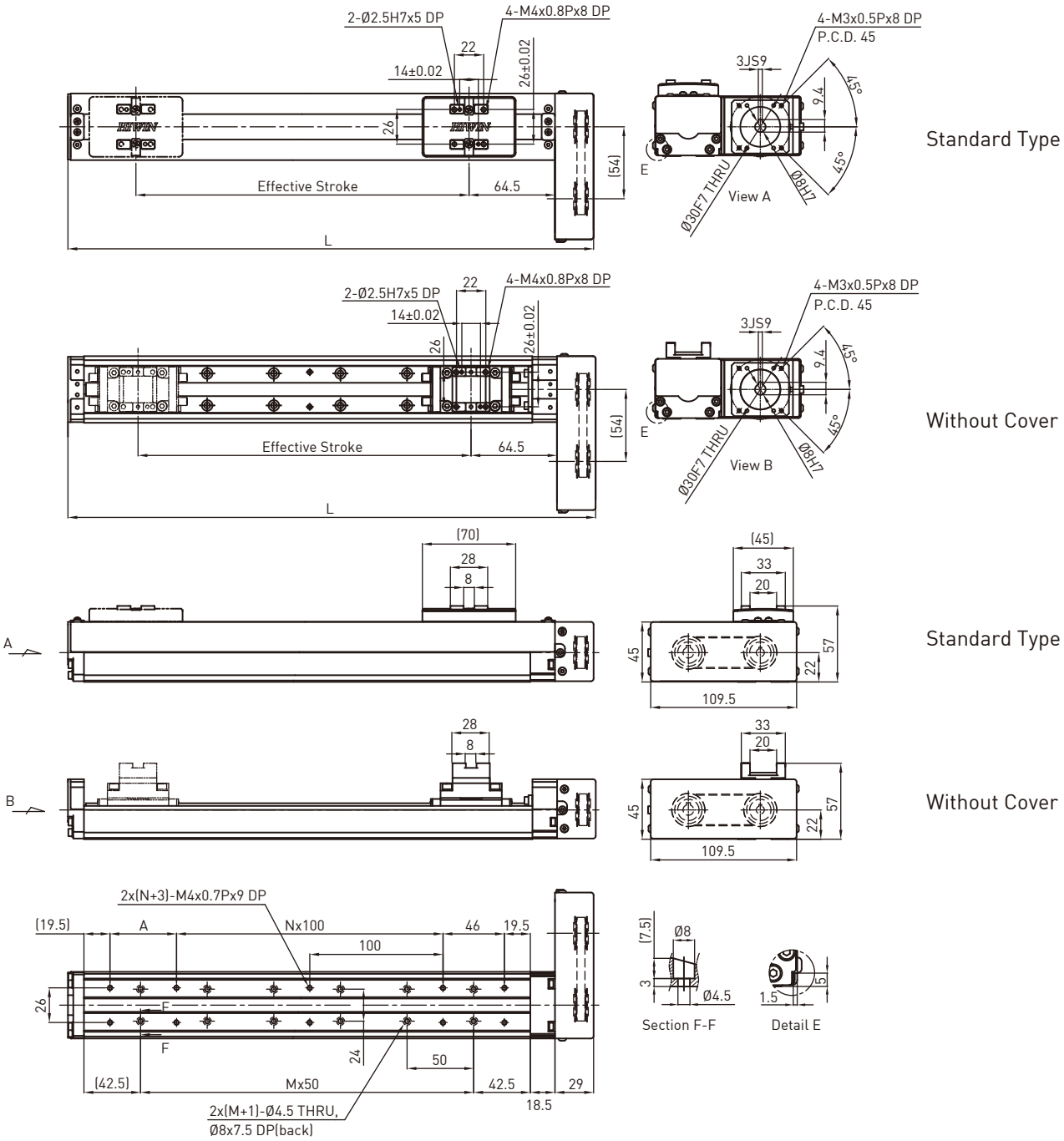

Effective Stroke (mm)	L	A	M	N	Weight (kg)	W/O Cover WT. (kg)
50	194.5	50	1	0	1.2	1.1
100	244.5	100	2	0	1.3	1.2
150	294.5	50	3	1	1.4	1.4
200	344.5	100	4	1	1.6	1.5
250	349.5	50	5	2	1.7	1.6
300	444.5	100	6	2	1.9	1.7

KC50 Motor side mount (Right)

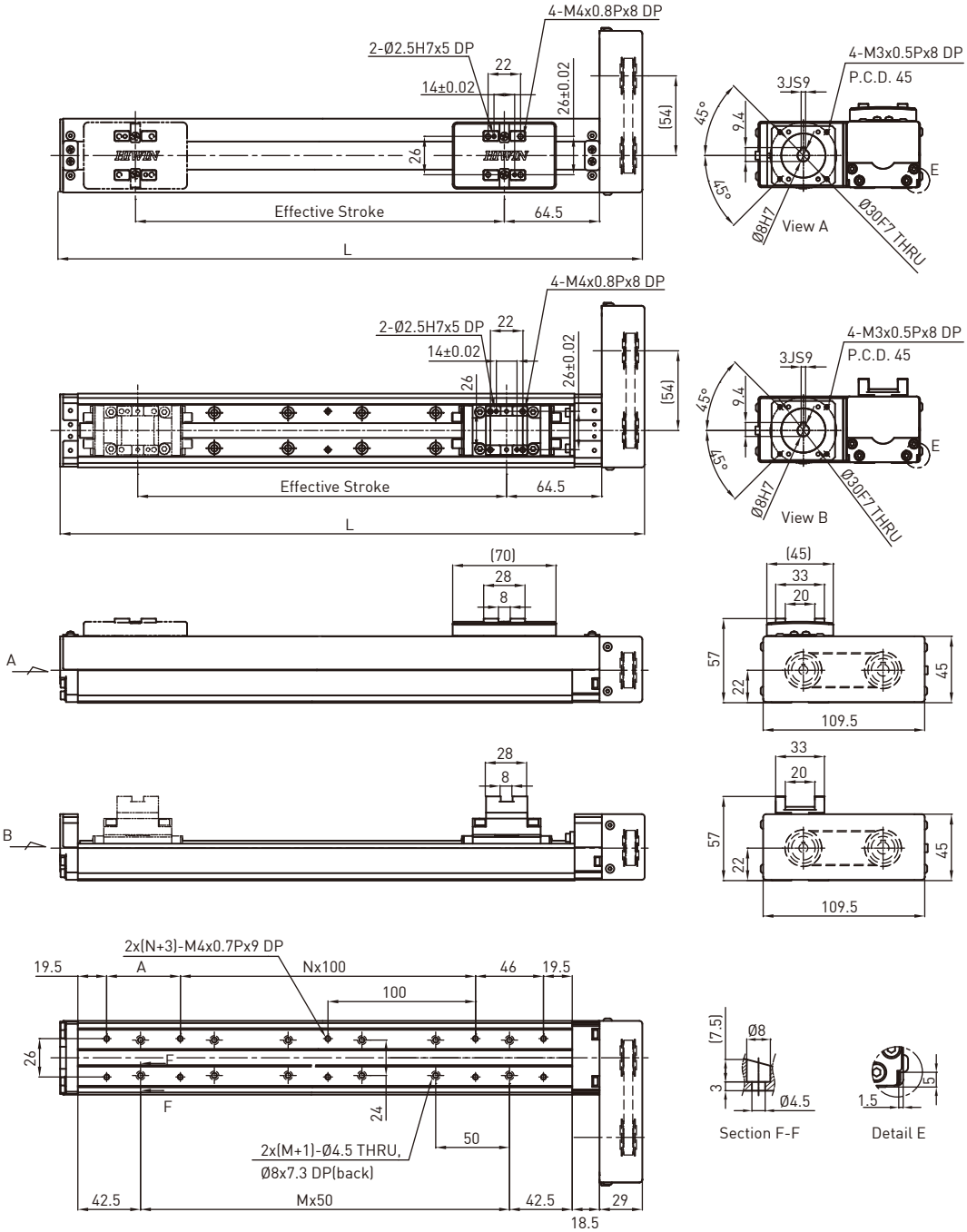

Standard Type

Without Cover

Standard Type

Without Cover

Effective Stroke (mm)	L	A	M	N	Weight (kg)	W/O Cover WT. (kg)
50	194.5	50	1	0	1.1	1
100	244.5	100	2	0	1.2	1.1
150	294.5	50	3	1	1.4	1.2
200	344.5	100	4	1	1.5	1.4
250	349.5	50	5	2	1.6	1.5
300	444.5	100	6	2	1.7	1.6

KC60

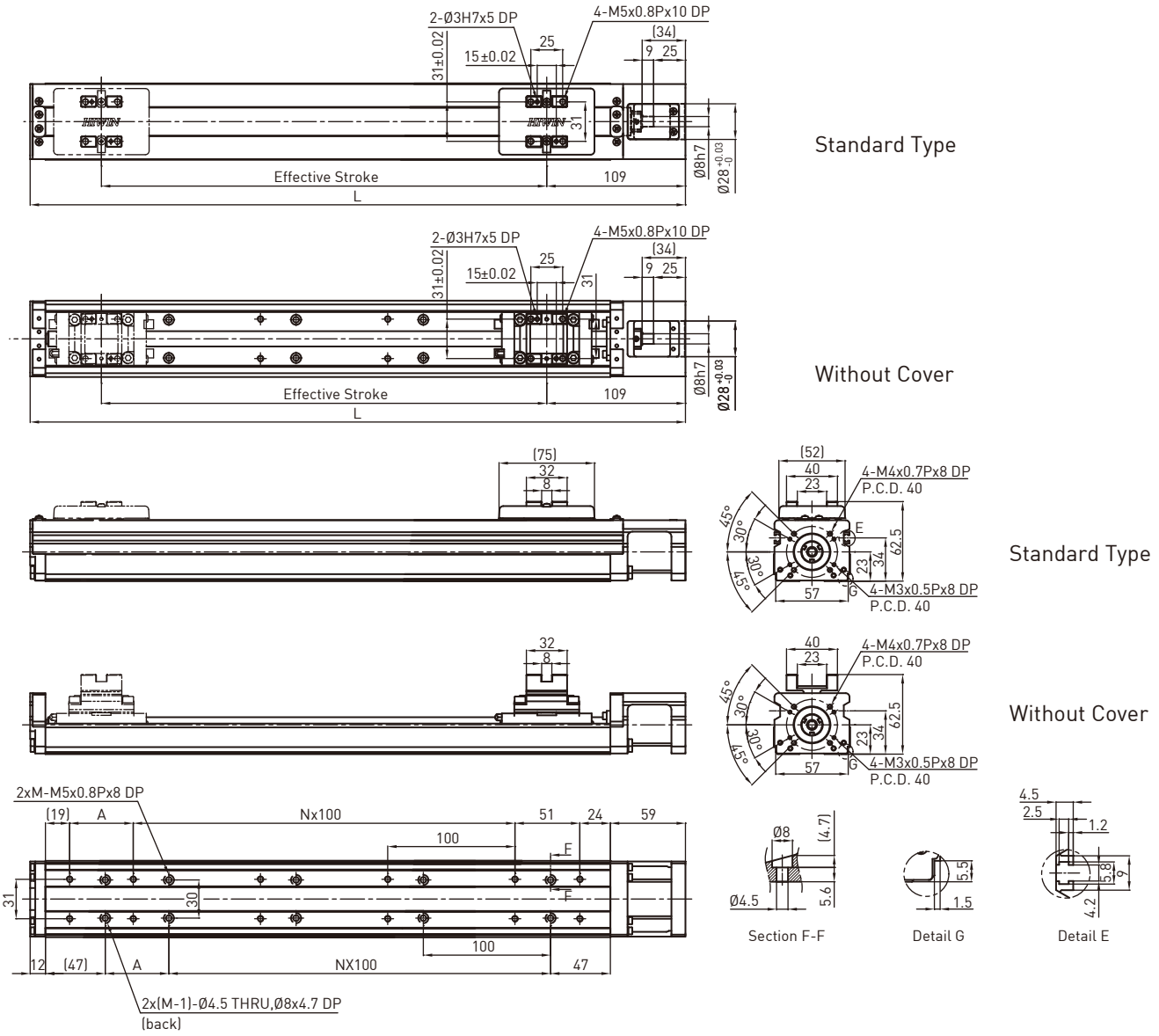

Effective Stroke (mm)	L	A	M	N	Weight (kg)	W/O Cover WT. (kg)
50	215	50	3	0	1.4	1.1
100	265	100	3	0	1.5	1.2
150	315	50	4	1	1.7	1.4
200	365	100	4	1	1.8	1.5
250	415	50	5	2	2	1.7
300	465	100	5	2	2.1	1.8
350	515	50	6	3	2.3	2
400	565	100	6	3	2.4	2.1
450	615	50	7	4	2.6	2.3
500	665	100	7	4	2.7	2.4
550	715	50	8	5	2.9	2.6
600	765	100	8	5	3	2.7

Note:Special ballscrew spindle end of 6 mm diameter is available, please contact hiwin if necessary.

KC60 Motor side mount (Left)

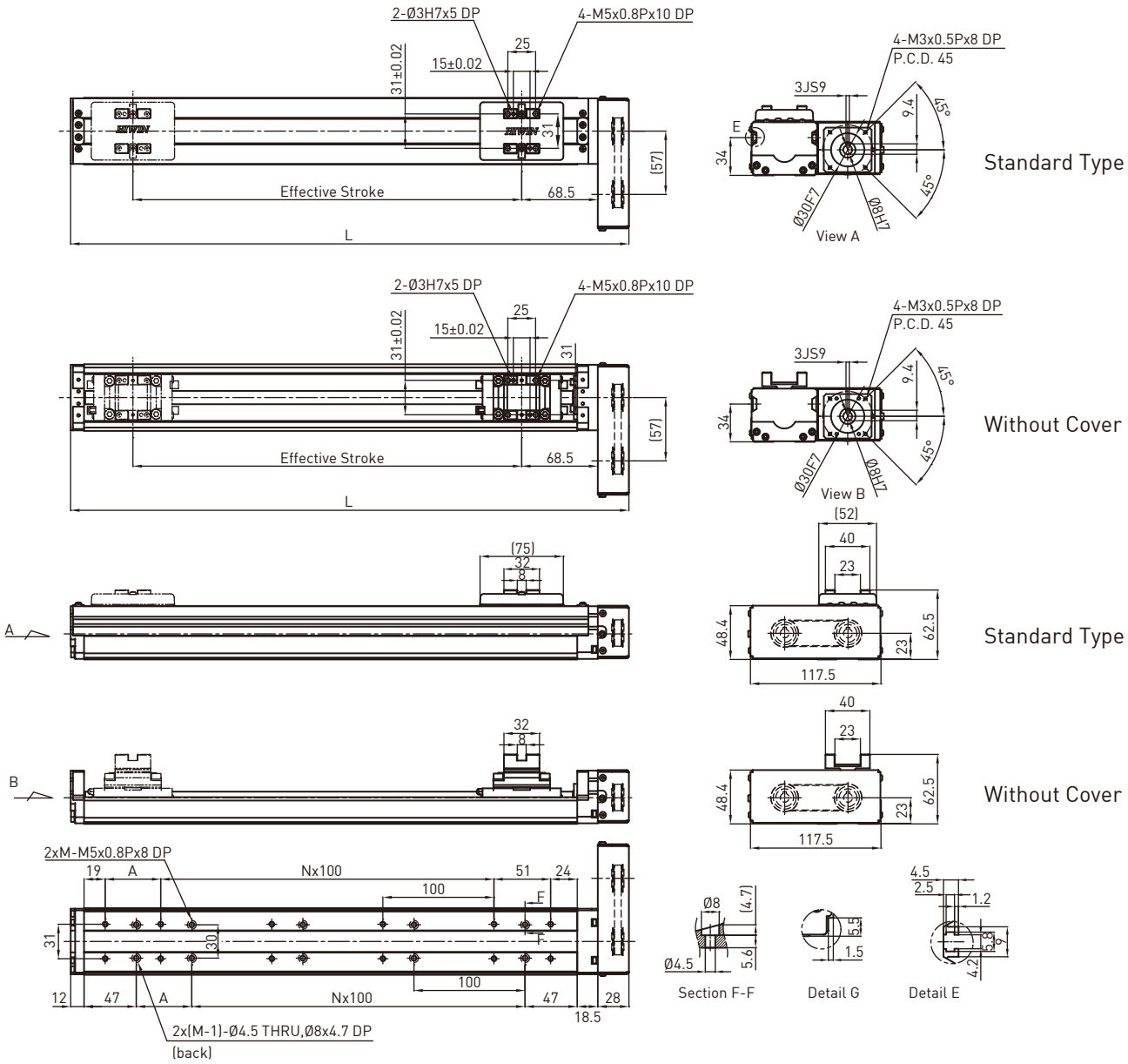

Effective Stroke (mm)	L	A	M	N	Weight (kg)	W/O Cover WT. (kg)
50	202.5	50	3	0	1.7	1.6
100	252.5	100	3	0	1.8	1.7
150	302.5	50	4	1	2	1.8
200	352.5	100	4	1	2.2	1.9
250	402.5	50	5	2	2.5	2
300	452.5	100	5	2	2.6	2.2
350	502.5	50	6	3	2.8	2.3
400	552.5	100	6	3	3	2.5
450	602.5	50	7	4	3.1	2.6
500	652.5	100	7	4	3.3	2.7
550	702.5	50	8	5	3.4	2.9
600	752.5	100	8	5	3.6	3

KC60 Motor side mount (Right)

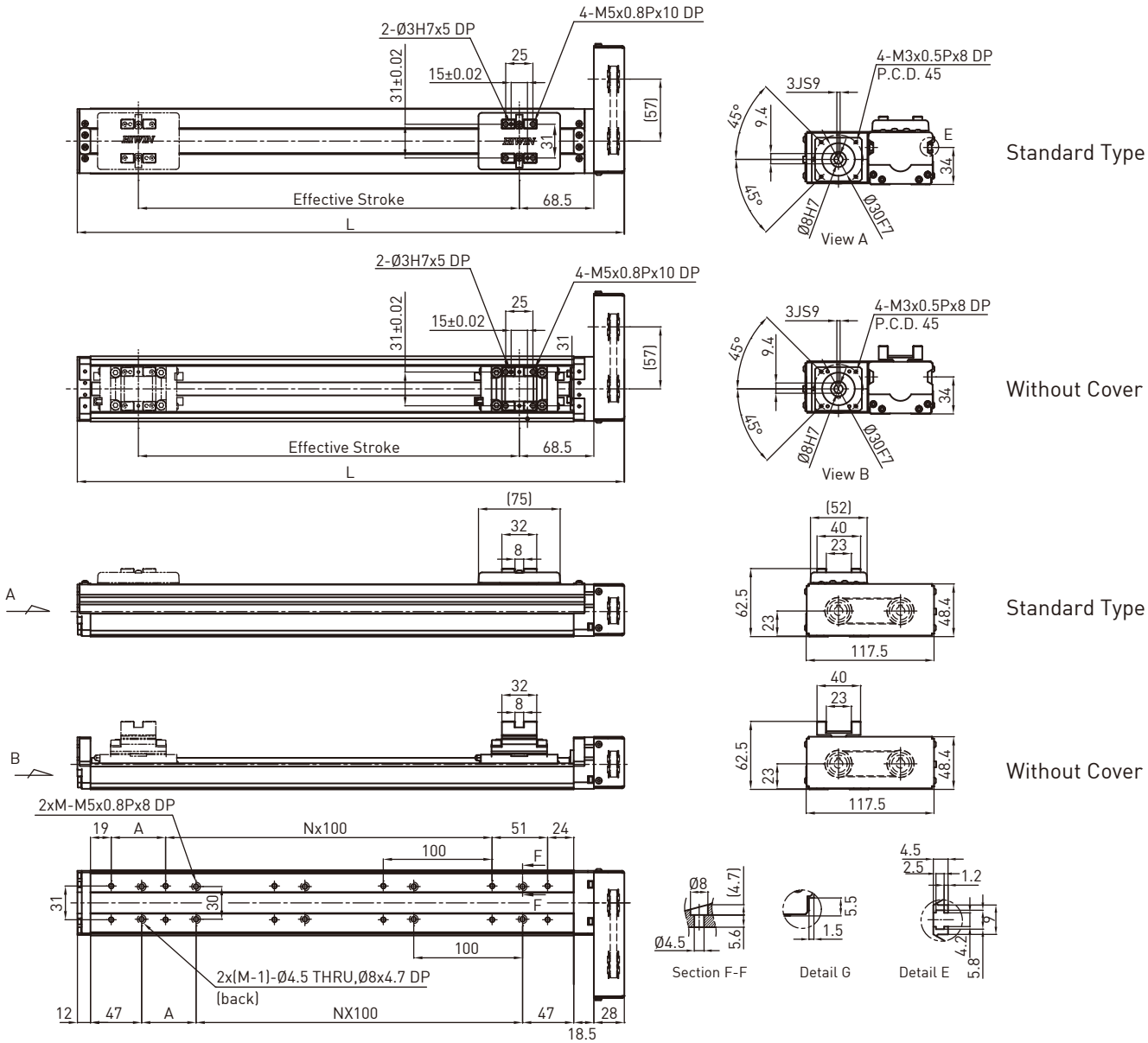

Effective Stroke (mm)	L	A	M	N	Weight (kg)	W/O Cover WT. (kg)
50	202.5	50	3	0	1.7	1.6
100	252.5	100	3	0	1.8	1.7
150	302.5	50	4	1	2	1.8
200	352.5	100	4	1	2.2	1.9
250	402.5	50	5	2	2.5	2
300	452.5	100	5	2	2.6	2.2
350	502.5	50	6	3	2.8	2.3
400	552.5	100	6	3	3	2.5
450	602.5	50	7	4	3.1	2.6
500	652.5	100	7	4	3.3	2.7
550	702.5	50	8	5	3.4	2.9
600	752.5	100	8	5	3.6	3

4.7 Motor Selection

HIWIN Servo Motor

Model selection	Rated Output	Brakes	Flange Selection			
			KC30	KC40	KC50	KC60
M05□	50W	Without	F4	F2	F2	F2
K05□		With				
M10□	100W	Without				
K10□		With				

*1. If alternate motor pairing is required, please contact HIWIN.
2. ref. catalog P.167

◎ KC30

Motor Adaptor Flange F2

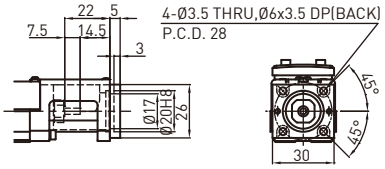

Motor Adaptor Flange F4

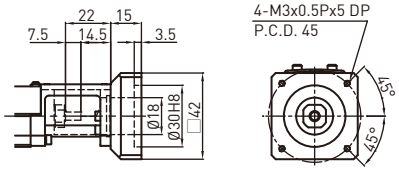

◎ KC40

Motor Adaptor Flange F1

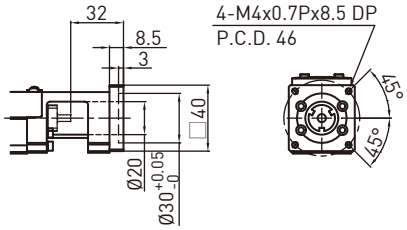

Motor Adaptor Flange F2

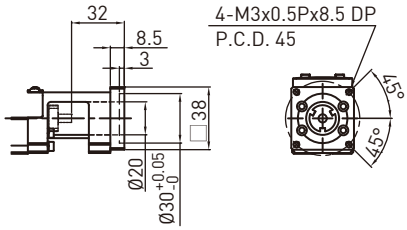

Mount Housing H0

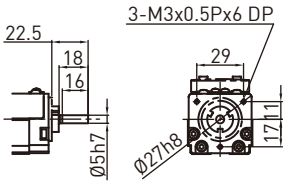

◎ KC50

Motor Adaptor Flange F1

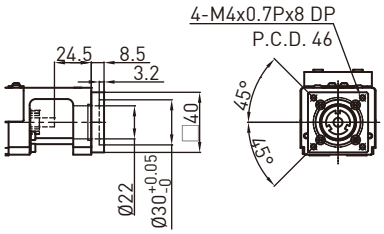

Motor Adaptor Flange F2

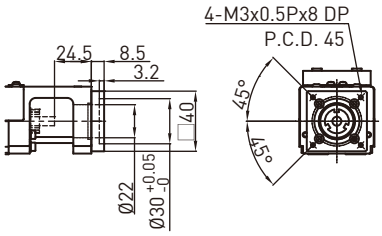

Mount Housing H0

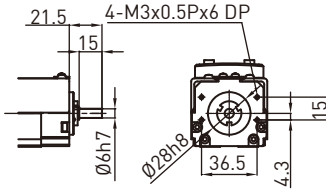

◎ KC60

Motor Adaptor Flange F1

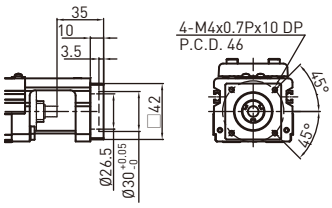

Motor Adaptor Flange F2

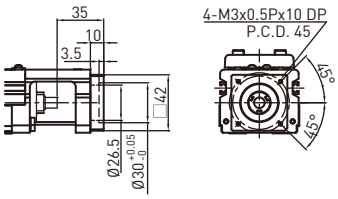

Mount Housing H0

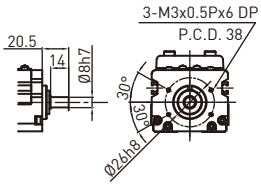

Single-Axis Robot
5. KA Series

5.1 Features

◎ Lightweight and high rigidity aluminum base
◎ Easy system installation and maintenance
◎ Complete selection of accessories for most applications
◎ Customized design

5.2 Applications

◎ Precision industry
◎ FPD industry
◎ Conveying equipment
◎ Inspection & testing equipment
◎ Assembly equipment

5.3 Model Number of Single-Axis Robot Series

KA 100 B 5 P E - 500 A E F0 E U S1 M501

Stage Type:
KA,KS,KU,KE

Nominal Width

Drive type:
B: Timing Belt
D: Double Slider
None: Ballscrew

Lead

Precision Grade:
P: Precision
C: Normal

E: Ballscrew Special Order
None: Normal Type

Effective Stroke (mm)

Slider Type:
A: Standard

E: Slider Special Order
None: Normal Type

Motor specification:
ref. catalog P.90~162
M: customer specified
None: Without Motor

Limit Switch:
S1 : OMRON SX671
S2 : OMRON SX674
S3 : Panasonic GX-F12A
S4 : Panasonic GX-F12A-P
SE : Sensor Special Order
None: Without Sensor

Cover:
U: Without cover
None: Standard Cover

E: Flange Special Order
None: Normal Type

Motor Flange Type :
F0: Standard
F1~6: See reference P119-P124
FD: Bottom
FI: Internal
FL: Left
FR: Right

5.4 Specifications

The KA series designation is represented by the following:

(1)	(2)	(3)	(4)	(5)	(6)	(7)	(8)	(9)
Model	Lead	Precision Grade	Effective Stroke	Slider Type	Motor Flange	Aluminum Cover	Limit Switch	Motor

1. Model

KA is the designation for all KA models and the number represents the width of the aluminum base.

2. Lead

The lead on the ballscrew, in millimeters, indicates how far a sliding table will travel with a complete rotation of the ballscrew. The following table shows the current available ballscrews for the KA series：

KA Model	KA136															
	KA100						KA170								KA200	
Ballscrew diameter (Φ)	15			16			20				25		32		25	
Lead (P)	10	20	40	5	10	32	5	10	20	40	25	50	32	40	10	25
L (available in left hand thread)			*	L	L	*	L		L	*	*	*	*	*	*	*

*Please contact HIWIN for high lead screws, left-hand thread screws, or any unlisted ballscrew.

3. Precision Grade

The precision grade for the sliding table to repeat the same position after traveling back and forth.
C; Normal grade :±0.02mm, P; Precision grade：±0.01mm.

The repeatability is measured by the largest error occurred at any point when the sliding table is traveling back and forth.

*Attention: KA products do not indicate the absolute positional accuracy.

4. Effective Stroke

The travel range for the KA sliding table (in millimeters).

*Attention: Vibration might occur when the effective stroke is longer than what is listed in the catalog. If vibration occurs, reduce the RPM to help improve the situation. Refer to the "Speed" section for information regarding RPM values.

5. Slider Type

The KA series is designed to only support the listed loading. Please contact HIWIN for inquiries on greater dynamic load or heavy load models.

6. Motor Flange

Direct connection is the standard type on the KA series. There are different flange options for adapting different types of motors, please refer to the following table.

	KA100		KA136		KA170		KA200	
	Screw	PCD	Screw	PCD	Screw	PCD	Screw	PCD
F0	M3	40	M4	60	M5	70	M6	90
	M4	46	M5	70				
F1	M3	45	M4	70	M6	90	M5	70
F2			M4	46	M5	90	M5	90
F3			M3	45	M6	□70		
F4			M5	90	M6	□69.58		
F5			M4	□50				
F6			M4	□47.14				

FD: Bottom connected motor (belt pulley drive).

FI ：Internal connected motor (coupling drive).

FL：Left connected motor (belt pulley drive).

FR：Right connected motor (belt pulley drive).

Please refer to the Appendix for different flange sizes.

7. Aluminum Cover

All standard KA models are equipped with an aluminum protective cover. U: without aluminum cover.

8. Limit Switch

HIWIN provides some standard options for limit switches. Please contact a HIWIN sales representative for any other type that is not listed.

9. Motor

Motor specification: ref. catalof P.167

No mark: motor not included. Please inform HIWIN in advance when installing a motor provided by the customer.

M: motor included. Please refer to the Appendix for motor selection, for other customized motors please contact a HIWIN sales representative.

5.5 Specifications

Series	Drive Type	Aluminum Base Width	Motor Choice	Maximum Load (kg)*1														Motor Connection Type	Model
				Lead (mm)															
				1	2	4	5	10	20	25	1	2	4	5	10	20	25		
				Horizontal							Vertical								
KA	Ballscrew	90	100W				24	12						6	3			F0, F1	KA90-
		100					50	32	20					12	8	3		F0, F1, FD, FI, FL, FR	KA100-
		120					50	32	20					12	8	3		F0, F1	KA120-
		136	200W				95	75	40					27	18	7		F0~F6, FD, FI, F, FR	KA136-
		150						80	40						20	8		F0~F6	KA150-
		170	400W					125	75						30	14		F0~F4, FD, FI, FL, FR	KA170-
		200	750W					150		85					40		20	F0~F2, FD, FI, FL, FR	KA200
	Belt*2	100	100W				7.5											FL, FR	KA100B-
		136	200W				15											FL, FR	KA136B-
		170	400W				30											FL, FR	KA170B-
KS	Ballscrew	90	100W				24	12						6	3			FI, F1	KS90-
		100					8	6	3.5					2	1.5	1		F1, FI, FL, FR	KS100-
		120					50	32	20					12	8	3		FI, F1	KS120-
		140	200W					75	35						18	7		FI, FL, FR	KS140
		150						80	40						20	8		FI	KS150-
		180	400W					110	50						30	14		FI, FL, FR	KS180-
	Belt*2	100	100W				3											FL, FR	KS100B-
		140	200W				15											FL, FR	KS140B-
		180	400W				30											FL, FR	KS180B-
KU	Ballscrew	60	100W				30	20						7	5			F0, F1	KU60-
		80	200W				60	40	20					15	10	5		F0~F6	KU80-
KE		30	28 stepping drive	3							1							F0	KE30-
		40	50W		6		4					1.5		1				F0~F2	KE40-
		50	100W			8							2					F0, F1	KE50-
		65					15	8						4	2			F0, F1	KE65-
		70					20	15						5	4			F0, F1	KE70-
		90	200W				25	23						6	5			F0~F6	KE90-

*1.Maximum mass refers to the maximum load value the stage could sustain. Load center is just above the sliding table.
2.The belt driven KA is to be used in horizontal applications. Maximum linear velocity of 1800 mm/sec.

5.6 U-shaped aluminum base features a light weight construction and high rigidity

Series	Moment of Inertia (mm^4)	Ixx	Iyy	
KA	KA100	2.17×10^5	1.81×10^6	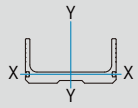
	KA136	3.37×10^5	5.36×10^6	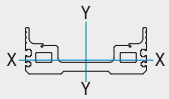
	KA170	8.84×10^5	1.24×10^7	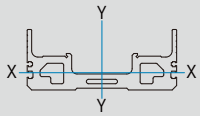
	KA200	9.52×10^5	1.90×10^7	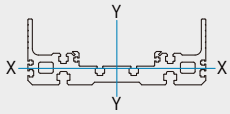
KS	KS100	8.67×10^4	1.45×10^6	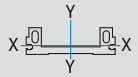
	KS140	2.34×10^5	4.4×10^6	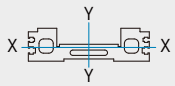
	KS180	3.7×10^5	1.2×10^7	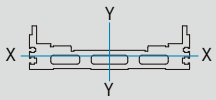
KU	KU60	5.24×10^5	5.48×10^5	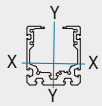
	KU80	1.56×10^5	1.67×10^6	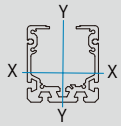

5.7 Table for the operating speed and stroke of KA

	KA Model				KA90		KA100				KA136			KA170 KA200		
	Ballscrew D (mm)				12		15		16		20			25		
	Ballscrew dr (mm)				9.642	9.622	12.364	12.399	12.899	12.684	16.924	16.624	17.084	21.824	21.644	22.094
Lead (mm)	5	10	20	25	5	10	10	20	5	10	5	10	20	10	20	25
RPM: S(rpm)	Maximum Linear Velocity V: (mm/sec)				Maximum Stroke											
200	17	33	67	83	2528	2525	2883	2887	2948	2922	-	-	-	-	-	-
300	25	50	100	125	2035	2033	2325	2329	2378	2357	2747	2617	2657	-	-	-
400	33	67	133	167	1742	1740	1993	1996	2039	2020	2358	2232	2266	2594	2582	2611
500	42	83	167	208	1541	1539	1766	1769	1807	1791	2093	1969	1999	2292	2282	2308
600	50	100	200	250	1393	1392	1598	1601	1636	1621	1897	1774	1802	2070	2060	2084
700	58	117	233	292	1278	1277	1468	1471	1503	1489	1744	1623	1649	1897	1888	1910
800	67	133	267	333	1186	1184	1363	1366	1396	1383	1622	1502	1526	1758	1749	1770
900	75	150	300	375	1109	1108	1277	1279	1307	1295	1520	1401	1424	1642	1634	1654
1000	83	167	333	417	1044	1043	1203	1205	1232	1220	1434	1316	1337	1545	1537	1556
1100	92	183	367	458	988	987	1140	1142	1167	1156	1360	1242	1263	1461	1453	1471
1150	96	192	383	479	963	962	1111	1113	1138	1128	1327	1209	1230	1423	1416	1433
1200	100	200	400	500	940	938	1085	1086	1111	1101	1295	1179	1198	1387	1380	1397
1300	108	217	433	542	897	895	1036	1038	1061	1051	1239	1122	1141	1323	1316	1332
1400	117	233	467	583	858	857	993	994	1017	1007	1188	1072	1090	1265	1259	1274
1500	125	250	500	625	824	823	954	955	977	968	1142	1027	1044	1213	1207	1222
1600	133	267	533	667	793	792	918	920	941	932	1101	986	1003	1166	1161	1175
1700	142	283	567	708	764	763	886	888	909	900	1063	949	965	1124	1118	1132
1800	150	300	600	750	739	738	857	858	879	870	1029	915	931	1085	1079	1093
1900	158	317	633	792	715	714	830	831	851	843	997	883	899	1049	1043	1057
2000	167	333	667	833	693	692	805	806	826	817	968	854	870	1016	1010	1024
2100	175	350	700	875	672	671	782	783	802	794	941	827	842	985	980	993
2200	183	367	733	917	653	652	760	762	780	772	916	802	817	956	951	964
2300	192	383	767	958	635	635	740	741	759	752	892	779	793	930	925	937
2400	200	400	800	1000	619	618	721	722	740	733	870	757	771	904	900	912
2500	208	417	833	1042	603	602	704	705	722	715	850	737	750	881	876	888
2600	217	433	867	1083	588	588	687	688	705	698	830	717	731	859	854	866
2700	225	450	900	1125	574	574	671	672	689	682	812	699	712	838	833	845
2800	233	467	933	1167	561	560	656	657	674	667	794	682	695	818	814	825
2900	242	483	967	1208	549	548	642	643	659	652	778	665	678	799	795	806
3000	250	500	1000	1250	537	536	629	630	645	639	762	650	662	781	777	788

* If customer require stroke more than standard specification, please contant HIWIN.

5.8 Dynamic Load

Several factors affect the calculation of loads acting on a KA system as shown in the figure below. The dynamic loads indicated in the catalog（Fy, Fz, Mx, My, Mz）are calculated based on 10,000 km of travel distance. To obtain the correct load value and maintain the service life of the KA, each load condition should be carefully considered.

The below figure shows the load being applied onto the center of the KA sliding table. In fact, the load is not necessarily in the middle during it’ s operation, and if the load is not on the center, there could be potential vibrations, over torque ,or slow reaction.

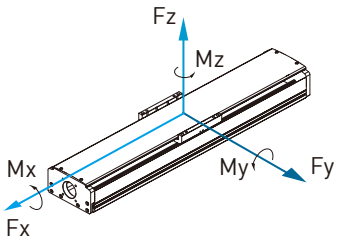

pic.1

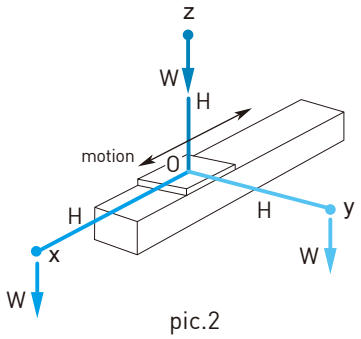

pic.2

To avoid these circumstances, please keep the loading (W) close to the center of the sliding table(O) within the distance(H).

	H (mm)		
Off Center Distance	x	y	z
KA100	550	550	550
KA136	550	550	550
KA170	780	780	780
KA200	900	900	900

5.9 Installation Method

There are several installation methods for the KA series as shown in the following figures.

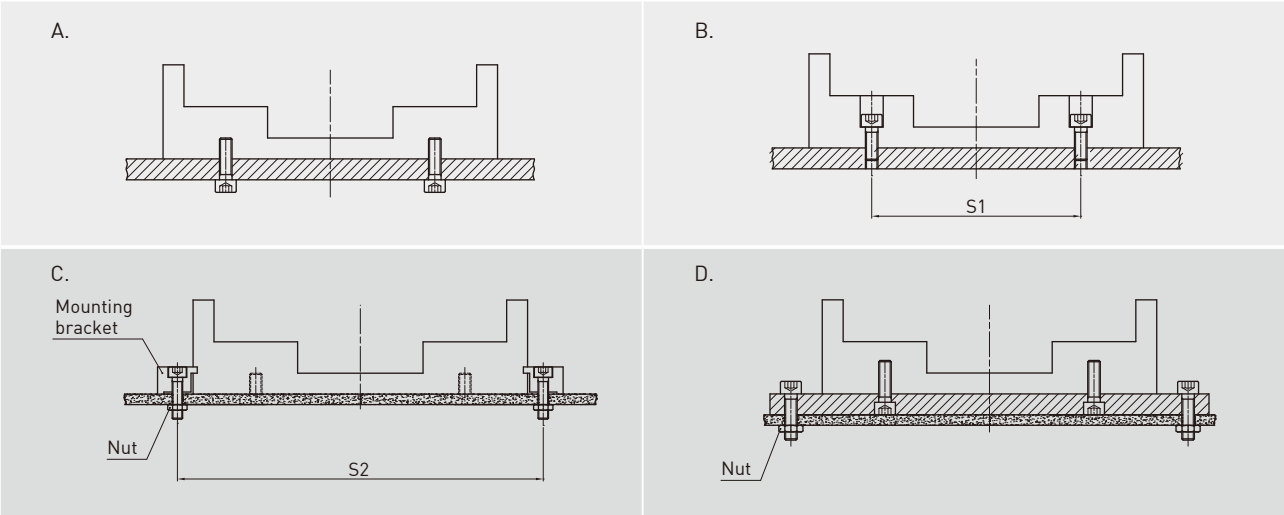

The table below indicates the distance between fixing screws, (S1) on type B and (S2) on type C (fixing from above):

KA Model	S1	S2	Screw
KA100	80	116	M5
KA136	112	150	M6
KA170	136	186	M8
KA200	162	218	M8

5.10 Grease Nipple

Single Rail / Single Block

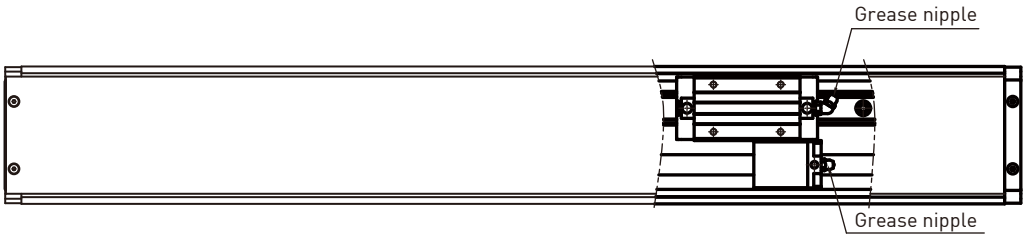

Double Rail / Double Block

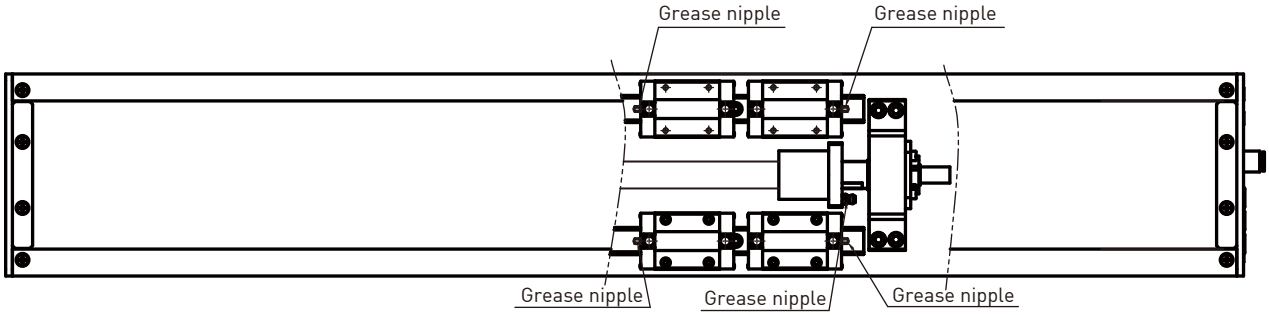

Single Rail / Double Block

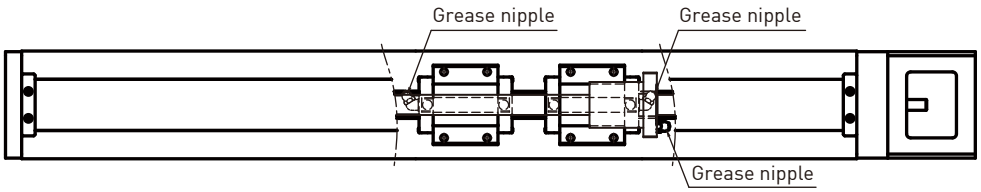

Single Rail / Single Block

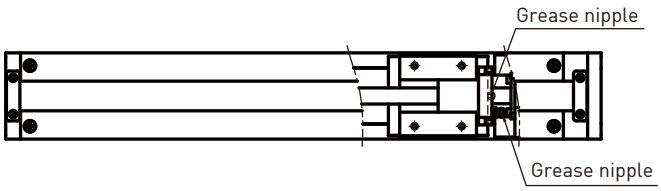

5.11 KA Series

Model Number for KA090

KA090	-10	P	-0600	A	F0	U	S1	M101
Model	Lead	Precision Grade	Effective Stroke	Slider Type	Motor Flange	Cover	Limit Switch	Motor
	5 mm 10 mm	C: Normal P: Precision		A: Standard	F0:Direct	U: Without Cover None : Standard Cover	S1: OMRON SX671 S2: OMRON SX674 S3: Panasonic GX-F12A S4: Panasonic GX-F12A-P None: No Limit Switch	M05□, K05□ M10□, K10□ Motor specification: ref. catalof P.167 M:customer specified None:Without Motor

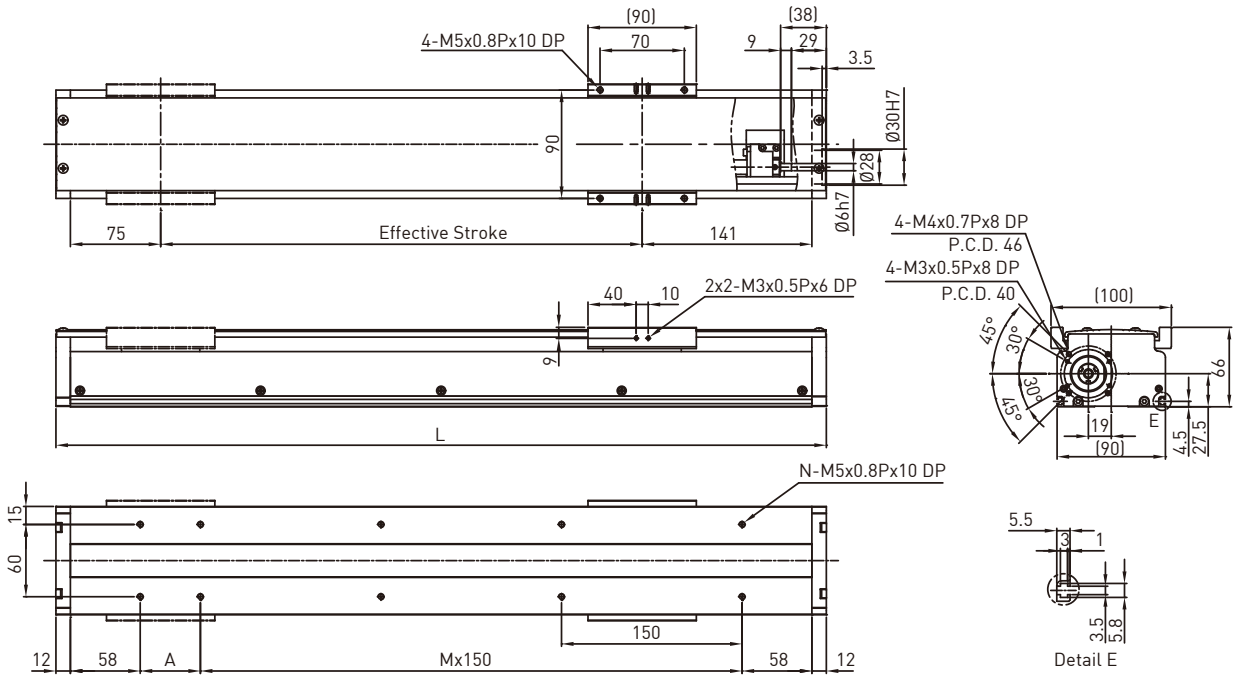

Effective stroke (mm)	L	A	M	N	Weight (kg)
50	290	150	0	4	3.38
100	340	50	1	6	3.78
150	390	100	1	6	4.18
200	440	150	1	6	4.58
250	490	50	2	8	4.98
300	540	100	2	8	5.38
350	590	150	2	8	5.78
400	640	50	3	10	6.18
450	690	100	3	10	6.58
500	740	150	3	10	6.98
550	790	50	4	12	7.38
600	840	100	4	12	7.78

AC motor output		W	100	
Drive			Ballscrew C7(normal)	
Lead		mm	5	10
Rated RPM		RPM	3000	3000
Max linear speed*		mm/sec	250	500
Rated thrust		N	280	140
Repeatability		mm	±0.02	
Effective stroke		mm	150~600	
Max load (H)		kg	24	12
Rated dynamic load**	Fyd	N	50	50
	Fzd	N	240	160
	Mxd	N-m	5	4.5
	Myd	N-m	2.3	2.1
	Mzd	N-m	2.3	2.1
Permitted load condition***	$\frac{Fy}{Fyd}+\frac{Fz}{Fzd}+\frac{Mx}{Mxd}+\frac{My}{Myd}+\frac{Mz}{Mzd}\leq 1$ Fy, Fz, Mx, My, Mz are working loads			

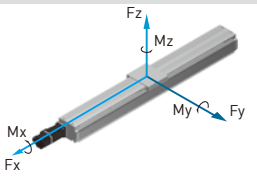

* Vibration might occur when the effective stroke is longer than 550mm.
The maximum speed should be decreased by 15% for every 100mm of increased stroke.
** The load condition is based on 10,000km operation.
*** If used on the vertical axis or in a special condition, please contact HIWIN.

Model Number for KA100

KA100	-20	P	-1050	A	F0	U	S1	M101
Model	Lead	Precision Grade	Effective Stroke	Slider Type	Motor Flange	Cover	Limit Switch	Motor
	5 mm 10 mm 20 mm	C: Normal P: Precision		A: Standard	F0:Direct	U: Without Cover None : Standard Cover	S1: OMRON SX671 S2: OMRON SX674 S3: Panasonic GX-F12A S4: Panasonic GX-F12A-P None: No Limit Switch	M05□, K05□ M10□, K10□ Motor specification: ref. catalof P.167 M:customer specified None:Without Motor

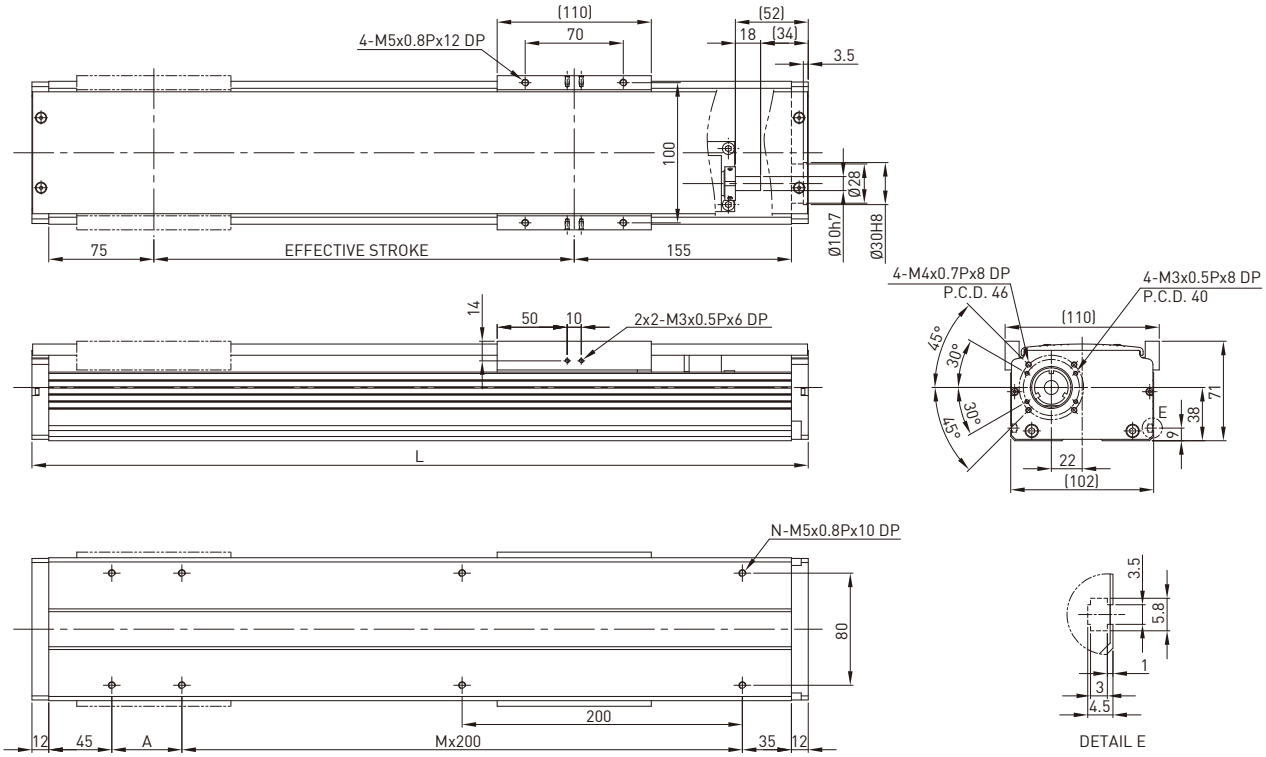

Effective stroke (mm)	L	A	M	N	Weight (kg)
100	354	50	1	6	4.86
150	404	100	1	6	5.34
200	454	150	1	6	5.81
250	504	200	1	6	6.29
300	554	50	2	8	6.77
350	604	100	2	8	7.25
400	654	150	2	8	7.73
450	704	200	2	8	8.2
500	754	50	3	10	8.67
550	804	100	3	10	9.15
600	854	150	3	10	9.63
650	904	200	3	10	10.11
700	954	50	4	12	10.59
750	1004	100	4	12	11.06
800	1054	150	4	12	11.54
850	1104	200	4	12	12.02
900	1154	50	5	14	12.49
950	1204	100	5	14	12.97
1000	1254	150	5	14	13.45
1050	1304	200	5	14	13.93

AC motor output		W	100		
Drive			Ballscrew C7(normal)		
Lead		mm	5	10	20
Rated RPM		RPM	3000	3000	3000
Max linear speed*		mm/sec	250	500	1000
Rated thrust		N	280	140	70
Repeatability		mm	±0.02		
Effective stroke		mm	100~1050		
Max load (H)		kg	50	32	20
Rated dynamic load**	Fyd	N	50	50	50
	Fzd	N	500	320	200
	Mxd	N-m	16	16	16
	Myd	N-m	14	13.5	13
	Mzd	N-m	14	13.5	13

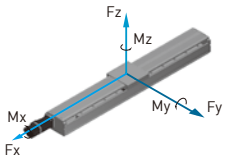

Permitted load condition***

$$\frac{Fy}{Fyd}+\frac{Fz}{Fzd}+\frac{Mx}{Mxd}+\frac{My}{Myd}+\frac{Mz}{Mzd}\leq 1$$

Fy, Fz, Mx, My, Mz are working loads

* Vibration might occur when the effective stroke is longer than 650mm.
The maximum speed should be decreased by 15% for every 100mm of increased stroke.
** The load condition is based on 10,000km operation.
*** If used on the vertical axis or in a special condition, please contact HIWIN.

Model Number for KA100-FD

KA100	-20	P	-1050	A	FD	U	S1	M101
Model	Lead	Precision Grade	Effective Stroke	Slider Type	Motor Flange	Cover	Limit Switch	Motor
	5 mm 10 mm 20 mm	C: Normal P: Precision		A: Standard	FD: Bottom	U: Without Cover None : Standard Cover	S1: OMRON SX671 S2: OMRON SX674 S3: Panasonic GX-F12A S4: Panasonic GX-F12A-P None: No Limit Switch	M05□, K05□ M10□, K10□ Motor specification: ref. catalof P.167 M:customer specified None:Without Motor

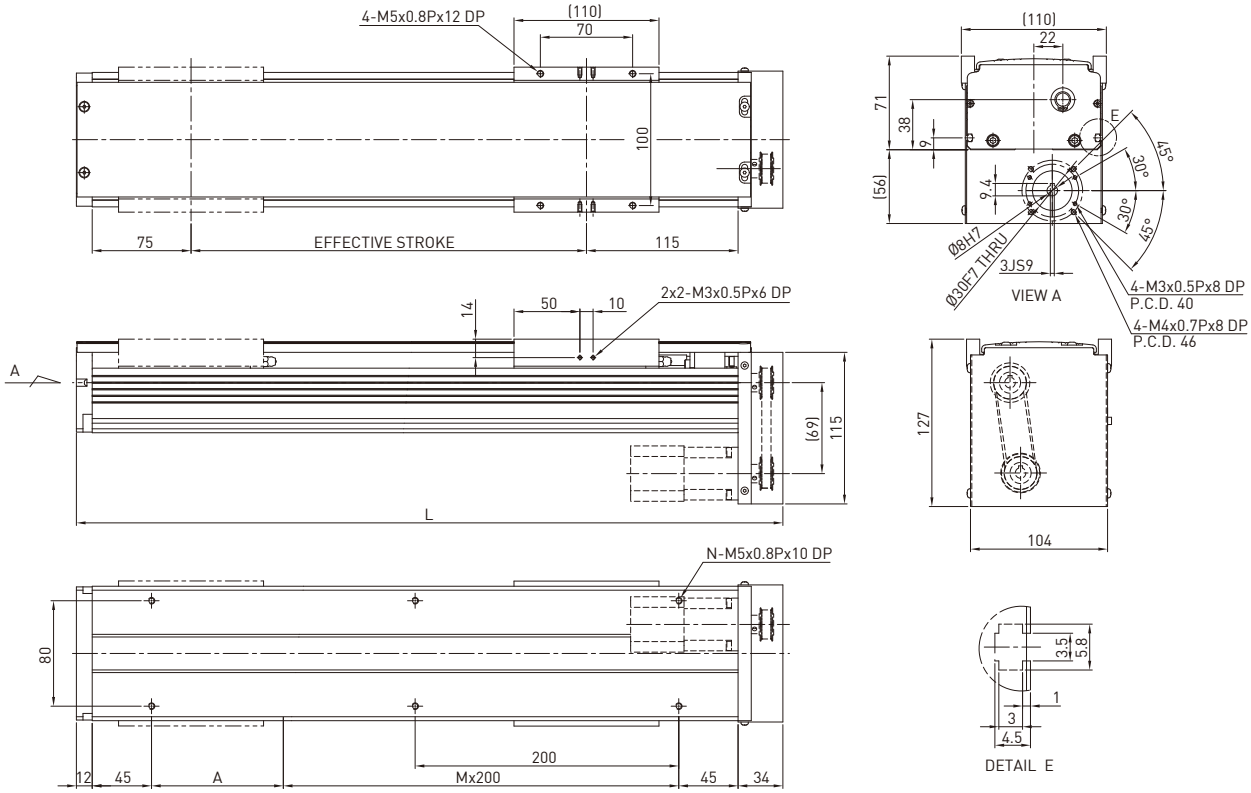

Effective stroke (mm)	L	A	M	N	Weight (kg)
100	336	200	0	4	4.91
150	386	50	1	6	5.41
200	436	100	1	6	5.88
250	486	150	1	6	6.36
300	536	200	1	6	6.85
350	586	50	2	8	7.33
400	636	100	2	8	7.82
450	686	150	2	8	8.29
500	736	200	2	8	8.76
550	786	50	3	10	9.25
600	836	100	3	10	9.73
650	886	150	3	10	10.22
700	936	200	3	10	10.71
750	986	50	4	12	11.19
800	1036	100	4	12	11.67
850	1086	150	4	12	12.15
900	1136	200	4	12	12.63
950	1186	50	5	14	13.12
1000	1236	100	5	14	13.6
1050	1286	150	5	14	14.08

AC motor output		W	100		
Drive			Ballscrew C7(normal)		
Lead		mm	5	10	20
Rated RPM		RPM	3000	3000	3000
Max linear speed*		mm/sec	250	500	1000
Rated thrust		N	280	140	70
Repeatability		mm	±0.02		
Effective stroke		mm	100~1050		
Max load (H)		kg	50	32	20
Rated dynamic load**	Fyd	N	50	50	50
	Fzd	N	500	320	200
	Mxd	N-m	16	16	16
	Myd	N-m	14	13.5	13
	Mzd	N-m	14	13.5	13

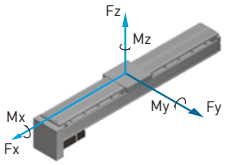

Permitted load condition* :

$$\frac{Fy}{Fyd}+\frac{Fz}{Fzd}+\frac{Mx}{Mxd}+\frac{My}{Myd}+\frac{Mz}{Mzd}\leq 1$$

Fy, Fz, Mx, My, Mz are working loads

* Vibration might occur when the effective stroke is longer than 650mm.
The maximum speed should be decreased by 15% for every 100mm of increased stroke.
** The load condition is based on 10,000km operation.
*** If used on the vertical axis or in a special condition, please contact HIWIN.

Model Number for KA100-FI

KA100	-20	P	-1050	A	FI	U	S1	M101
Model	Lead	Precision Grade	Effective Stroke	Slider Type	Motor Flange	Cover	Limit Switch	Motor
	5 mm 10 mm 20 mm	C: Normal P: Precision		A: Standard	FI : Internal	U: Without Cover None : Standard Cover	S1: OMRON SX671 S2: OMRON SX674 S3: Panasonic GX-F12A S4: Panasonic GX-F12A-P None: No Limit Switch	M05□, K05□ M10□, K10□ Motor specification: ref. catalof P.167 M:customer specified None:Without Motor

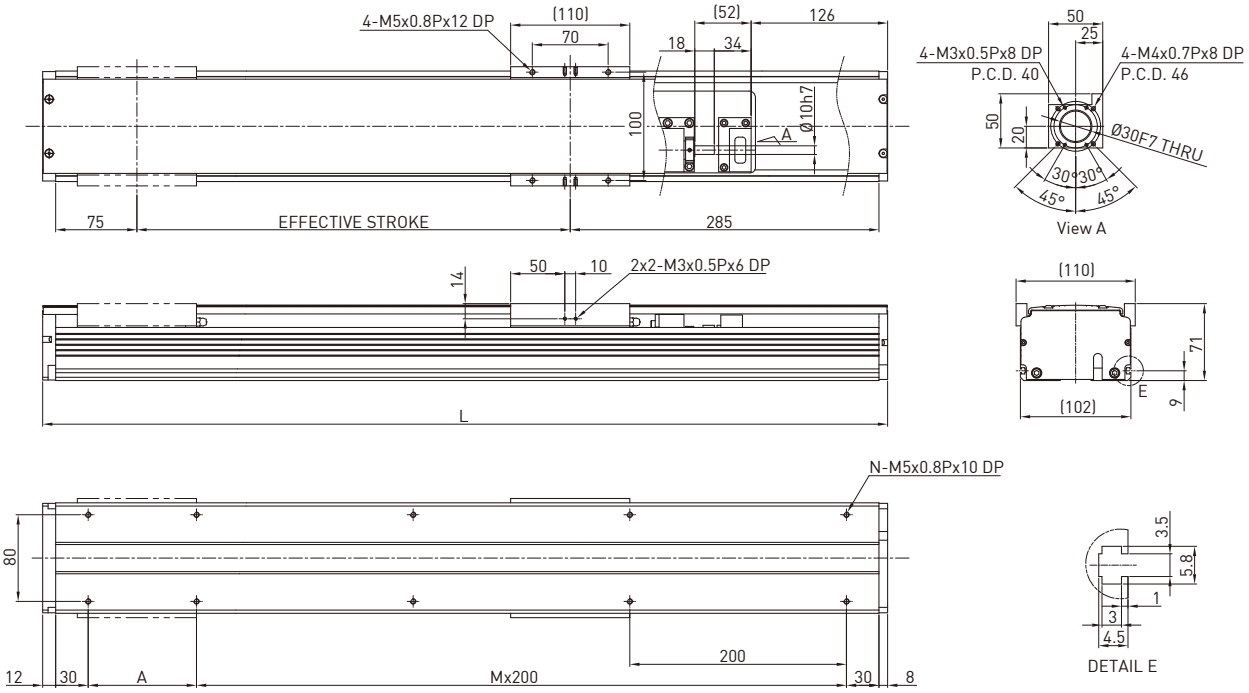

Effective stroke (mm)	L	A	M	N	Weight (kg)
100	480	200	1	6	5.2
150	530	50	2	8	5.71
200	580	100	2	8	6.22
250	630	150	2	8	6.73
300	680	200	2	8	7.24
350	730	50	3	10	7.76
400	780	100	3	10	8.27
450	830	150	3	10	8.77
500	880	200	3	10	9.28
550	930	50	4	12	9.79
600	980	100	4	12	10.31
650	1030	150	4	12	10.82
700	1080	200	4	12	11.33
750	1130	50	5	14	11.83
800	1180	100	5	14	12.35
850	1230	150	5	14	12.86
900	1280	200	5	14	13.37
950	1330	50	6	16	13.88
1000	1380	100	6	16	14.39
1050	1430	150	6	16	14.91

AC motor output		W	100		
Drive			Ballscrew C7(normal)		
Lead		mm	5	10	20
Rated RPM		RPM	3000	3000	3000
Max linear speed*		mm/sec	250	500	1000
Rated thrust		N	280	140	70
Repeatability		mm	±0.02		
Effective stroke		mm	100~1050		
Max load (H)		kg	50	32	20
Rated dynamic load**	Fyd	N	50	50	50
	Fzd	N	500	320	200
	Mxd	N-m	16	16	16
	Myd	N-m	14	13.5	13
	Mzd	N-m	14	13.5	13

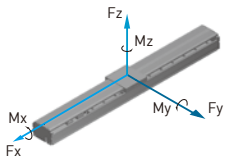

Permitted load condition***

$$\frac{Fy}{Fyd}+\frac{Fz}{Fzd}+\frac{Mx}{Mxd}+\frac{My}{Myd}+\frac{Mz}{Mzd}\leq 1$$

Fy, Fz, Mx, My, Mz are working loads

* Vibration might occur when the effective stroke is longer than 650mm.
The maximum speed should be decreased by 15% for every 100mm of increased stroke.
** The load condition is based on 10,000km operation.
*** If used on the vertical axis or in a special condition, please contact HIWIN.

Model Number for KA100-FL

KA100	-20	P	-1050	A	FL	U	S1	M101
Model	Lead	Precision Grade	Effective Stroke	Slider Type	Motor Flange	Cover	Limit Switch	Motor
	5 mm 10 mm 20 mm	C: Normal P: Precision		A: Standard	FL: Left	U: Without Cover None : Standard Cover	S1: OMRON SX671 S2: OMRON SX674 S3: Panasonic GX-F12A S4: Panasonic GX-F12A-P None: No Limit Switch	M05□, K05□ M10□, K10□ Motor specification: ref. catalof P.167 M:customer specified None:Without Motor

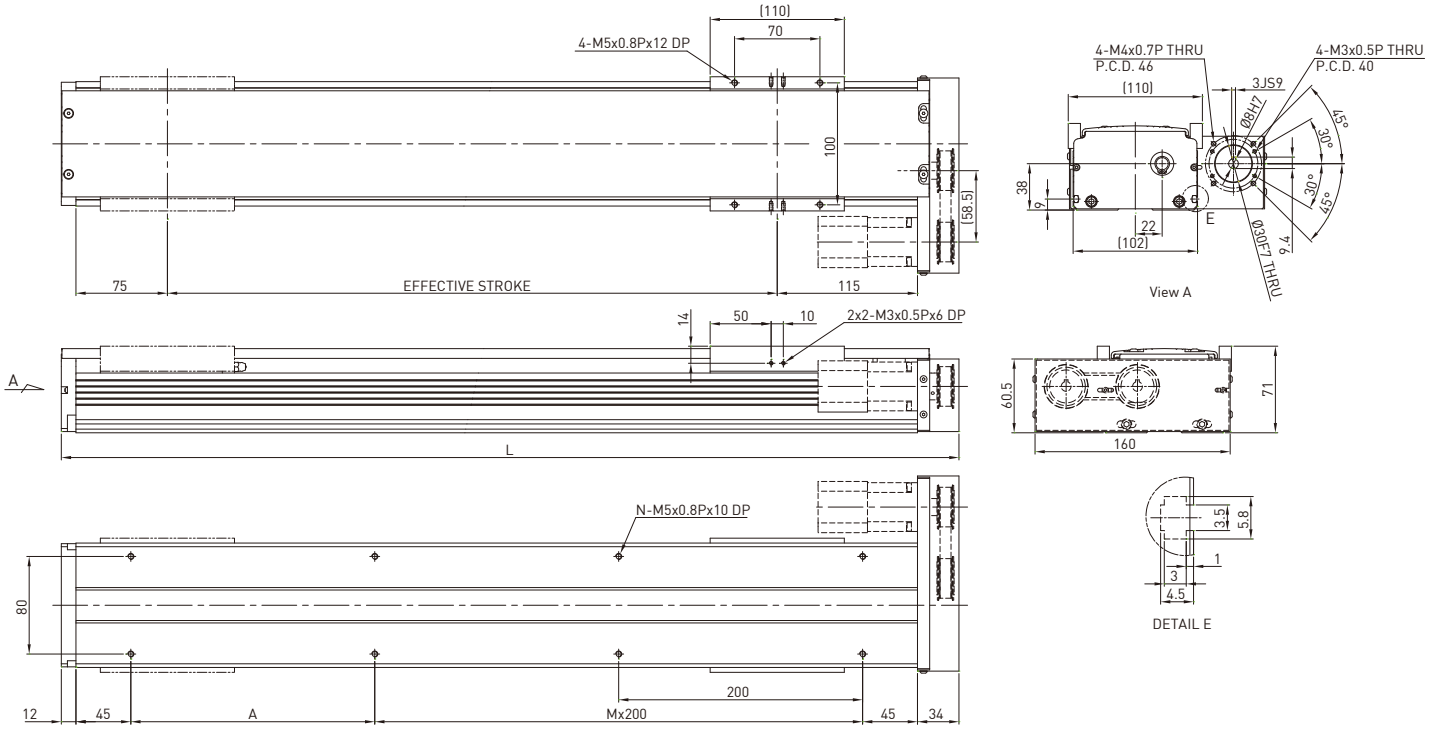

Effective stroke (mm)	L	A	M	N	Weight (kg)
100	336	200	0	4	4.91
150	386	50	1	6	5.41
200	436	100	1	6	5.88
250	486	150	1	6	6.36
300	536	200	1	6	6.85
350	586	50	2	8	7.33
400	636	100	2	8	7.82
450	686	150	2	8	8.29
500	736	200	2	8	8.76
550	786	50	3	10	9.25
600	836	100	3	10	9.73
650	886	150	3	10	10.22
700	936	200	3	10	10.71
750	986	50	4	12	11.19
800	1036	100	4	12	11.67
850	1086	150	4	12	12.15
900	1136	200	4	12	12.63
950	1186	50	5	14	13.12
1000	1236	100	5	14	13.6
1050	1286	150	5	14	14.08

AC motor output		W	100		
Drive			Ballscrew C7(normal)		
Lead		mm	5	10	20
Rated RPM		RPM	3000	3000	3000
Max linear speed*		mm/sec	250	500	1000
Rated thrust		N	280	140	70
Repeatability		mm	±0.02		
Effective stroke		mm	100~1050		
Max load (H)		kg	50	32	20
Rated dynamic load**	Fyd	N	50	50	50
	Fzd	N	500	320	200
	Mxd	N-m	16	16	16
	Myd	N-m	14	13.5	13
	Mzd	N-m	14	13.5	13

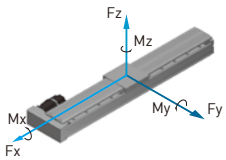

Permitted load condition***

$$\frac{Fy}{Fyd}+\frac{Fz}{Fzd}+\frac{Mx}{Mxd}+\frac{My}{Myd}+\frac{Mz}{Mzd}\leq 1$$

Fy, Fz, Mx, My, Mz are working loads

* Vibration might occur when the effective stroke is longer than 650mm.
The maximum speed should be decreased by 15% for every 100mm of increased stroke.
** The load condition is based on 10,000km operation.
*** If used on the vertical axis or in a special condition, please contact HIWIN.

Model Number for KA100-FR

KA100	-20	P	-1050	A	FR	U	S1	M101
Model	Lead	Precision Grade	Effective Stroke	Slider Type	Motor Flange	Cover	Limit Switch	Motor
	5 mm 10 mm 20 mm	C: Normal P: Precision		A: Standard	FR: Right	U: Without Cover None : Standard Cover	S1: OMRON SX671 S2: OMRON SX674 S3: Panasonic GX-F12A S4: Panasonic GX-F12A-P None: No Limit Switch	M05□, K05□ M10□, K10□ Motor specification: ref. catalof P.167 M:customer specified None:Without Motor

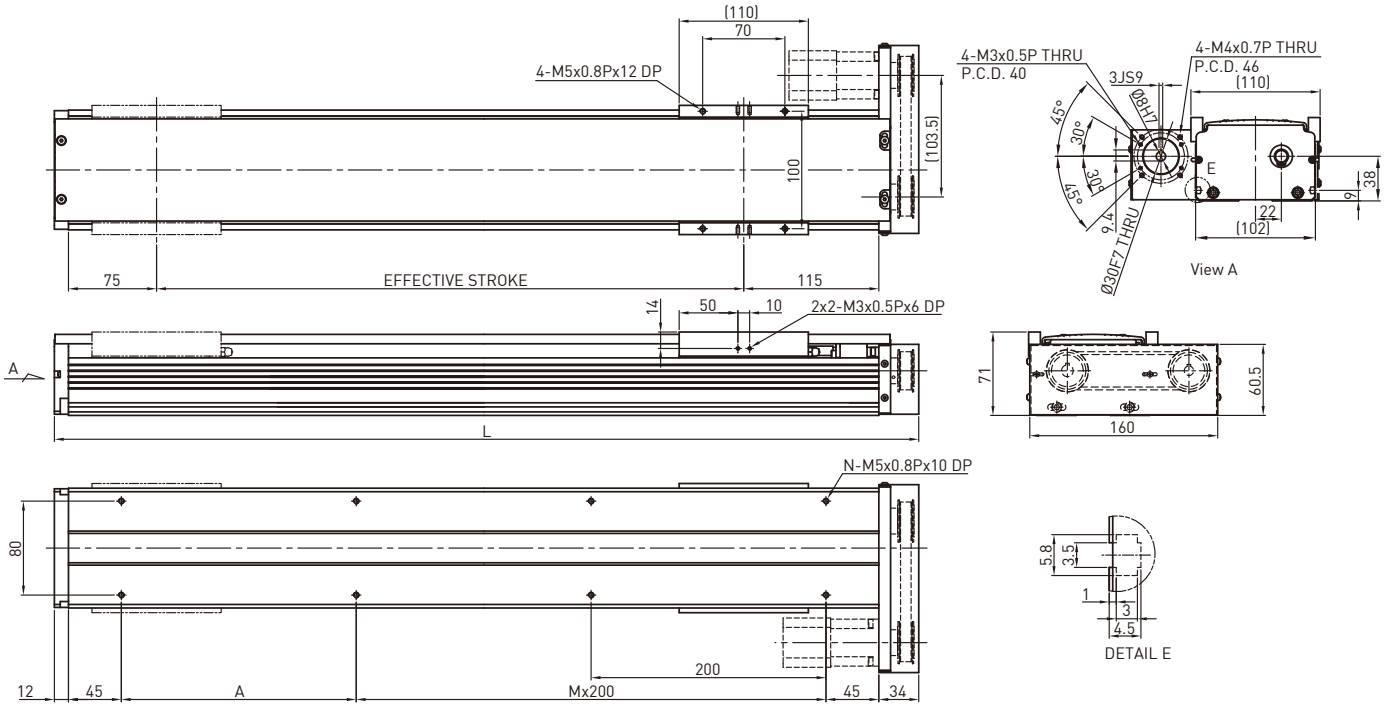

Effective stroke (mm)	L	A	M	N	Weight (kg)
100	336	200	0	4	4.91
150	386	50	1	6	5.41
200	436	100	1	6	5.88
250	486	150	1	6	6.36
300	536	200	1	6	6.85
350	586	50	2	8	7.33
400	636	100	2	8	7.82
450	686	150	2	8	8.29
500	736	200	2	8	8.76
550	786	50	3	10	9.25
600	836	100	3	10	9.73
650	886	150	3	10	10.22
700	936	200	3	10	10.71
750	986	50	4	12	11.19
800	1036	100	4	12	11.67
850	1086	150	4	12	12.15
900	1136	200	4	12	12.63
950	1186	50	5	14	13.12
1000	1236	100	5	14	13.6
1050	1286	150	5	14	14.08

AC motor output		W	100		
Drive			Ballscrew C7(normal)		
Lead		mm	5	10	20
Rated RPM		RPM	3000	3000	3000
Max linear speed*		mm/sec	250	500	1000
Rated thrust		N	280	140	70
Repeatability		mm	±0.02		
Effective stroke		mm	100~1050		
Max load (H)		kg	50	32	20
Rated dynamic load**	Fyd	N	50	50	50
	Fzd	N	500	320	200
	Mxd	N-m	16	16	16
	Myd	N-m	14	13.5	13
	Mzd	N-m	14	13.5	13

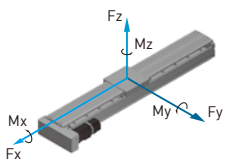

Permitted load condition***

$$\frac{Fy}{Fyd}+\frac{Fz}{Fzd}+\frac{Mx}{Mxd}+\frac{My}{Myd}+\frac{Mz}{Mzd}\leq 1$$

Fy, Fz, Mx, My, Mz are working loads

* Vibration might occur when the effective stroke is longer than 650mm.
The maximum speed should be decreased by 15% for every 100mm of increased stroke.
** The load condition is based on 10,000km operation.
*** If used on the vertical axis or in a special condition, please contact HIWIN.

Model Number for KA100B-FL

KA100	B	-84	C	-3000	A	FL	U	S1	M101
Model	Timing Belt	Pulley Perimeter	Precision Grade	Effective Stroke	Slider Type	Motor Flange	Cover	Limit Switch	Motor
			C: Normal		A: Standard	FL: Left	U: Without Cover None : Standard Cover	S1: OMRON SX671 S2: OMRON SX674 S3: Panasonic GX-F12A S4: Panasonic GX-F12A-P None: No Limit Switch	M05□, K05□ M10□, K10□ Motor specification: ref. catalof P.167 M:customer specified None:Without Motor

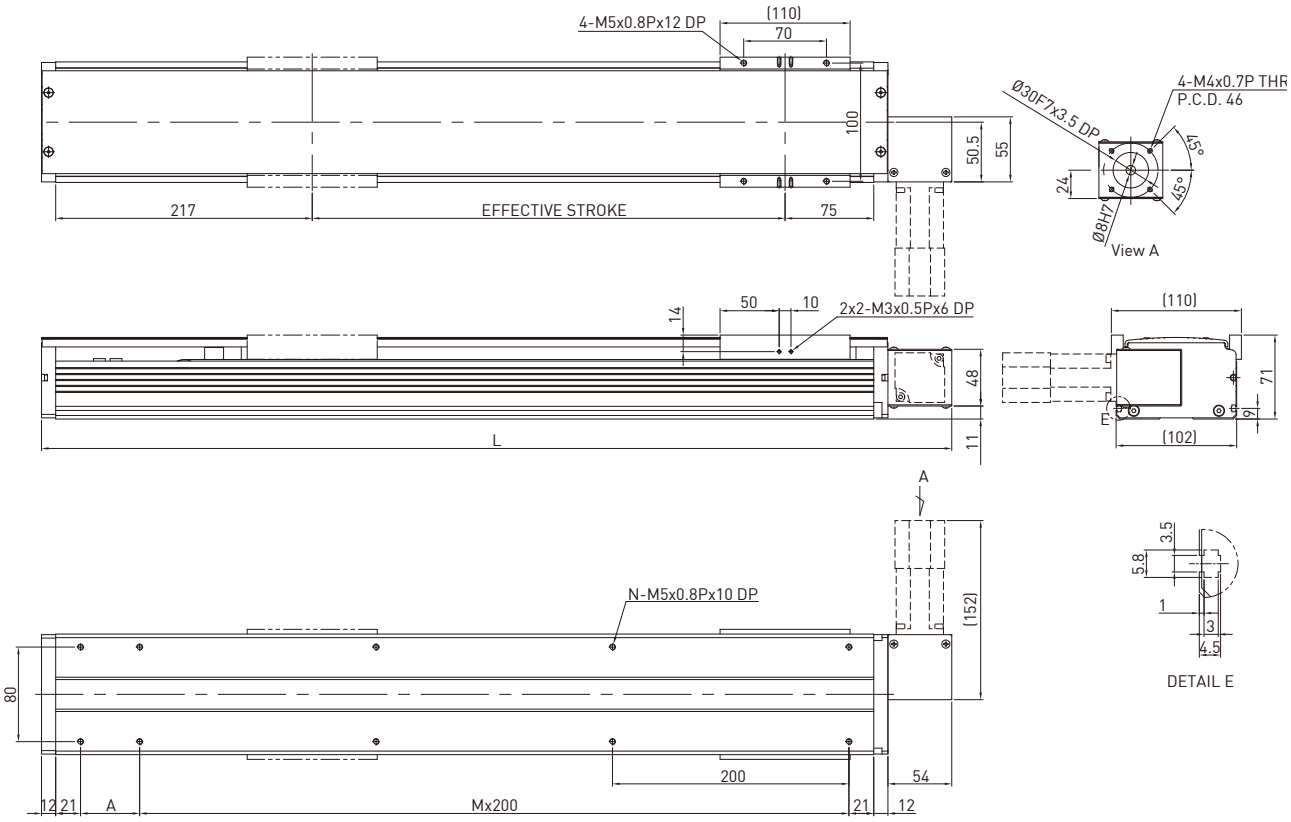

Effective stroke (mm)	L	A	M	N	Weight (kg)
200	570	50	2	8	5.41
400	770	50	3	10	7.07
600	970	50	4	12	8.83
800	1170	50	5	14	10.49
1000	1370	50	6	16	12.15
1200	1570	50	7	18	13.91
1400	1770	50	8	20	15.57
1600	1970	50	9	22	17.33
1800	2170	50	10	24	18.99
2000	2370	50	11	26	20.65
2200	2570	50	12	28	22.41
2400	2770	50	13	30	24.07
2600	2970	50	14	32	25.83
2800	3170	50	15	34	27.49
3000	3370	50	16	36	29.15

AC motor output		W	100
Drive			Timing Belt
Pulley Perimeter		mm	84
Pulley RPM		RPM	1286
Max linear speed		mm/sec	1800
Rated thrust		N	33
Repeatability		mm	±0.1
Effective stroke		mm	200~3000
Max load (H)		kg	7.5
Rated dynamic load*	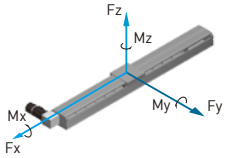	Fyd	N	50
		Fzd	N	75
		Mxd	N-m	15
		Myd	N-m	13
		Mzd	N-m	13
Permitted load condition**	$\frac{Fy}{Fyd}+\frac{Fz}{Fzd}+\frac{Mx}{Mxd}+\frac{My}{Myd}+\frac{Mz}{Mzd}\leq 1$ Fy, Fz, Mx, My, Mz are working loads		

*The load condition is based on 10,000km operation.
**For horizontal applications only. If used in a special condition, please contact HIWIN.

Model Number for KA100B-FR

KA100	B	-84	C	-3000	A	FR	U	S1	M101
Model	Timing Belt	Pulley Perimeter	Precision Grade	Effective Stroke	Slider Type	Motor Flange	Cover	Limit Switch	Motor
			C: Normal		A: Standard	FR: Right	U: Without Cover None : Standard Cover	S1: OMRON SX671 S2: OMRON SX674 S3: Panasonic GX-F12A S4: Panasonic GX-F12A-P None: No Limit Switch	M05□, K05□ M10□, K10□ Motor specification: ref. catalof P.167 M:customer specified None:Without Motor

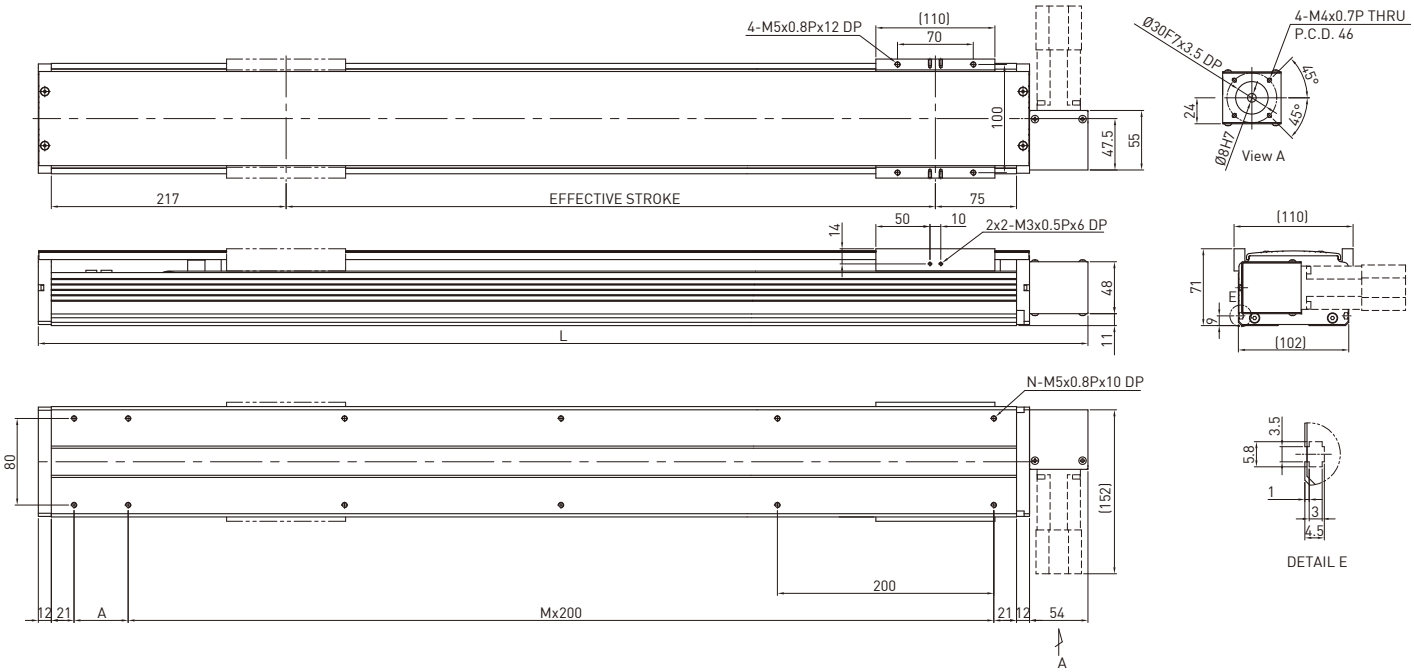

Effective stroke (mm)	L	A	M	N	Weight (kg)
200	570	50	2	8	5.41
400	770	50	3	10	7.07
600	970	50	4	12	8.83
800	1170	50	5	14	10.49
1000	1370	50	6	16	12.15
1200	1570	50	7	18	13.91
1400	1770	50	8	20	15.57
1600	1970	50	9	22	17.33
1800	2170	50	10	24	18.99
2000	2370	50	11	26	20.65
2200	2570	50	12	28	22.41
2400	2770	50	13	30	24.07
2600	2970	50	14	32	25.83
2800	3170	50	15	34	27.49
3000	3370	50	16	36	29.15

AC motor output		W	100
Drive			Timing Belt
Pulley Perimeter		mm	84
Pulley RPM		RPM	1286
Max linear speed		mm/sec	1800
Rated thrust		N	33
Repeatability		mm	±0.1
Effective stroke		mm	200~3000
Max load (H)		kg	7.5
Rated dynamic load*	Fyd	N	50
	Fzd	N	75
	Mxd	N-m	15
	Myd	N-m	13
	Mzd	N-m	13
Permitted load condition**	$\frac{Fy}{Fyd}+\frac{Fz}{Fzd}+\frac{Mx}{Mxd}+\frac{My}{Myd}+\frac{Mz}{Mzd}\leq 1$ Fy, Fz, Mx, My, Mz are working loads		

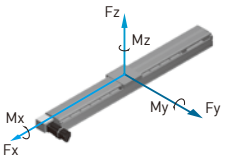

*The load condition is based on 10,000km operation.
**For horizontal applications only. If used in a special condition, please contact HIWIN.

Model Number for KA120

KA120	-20	P	-1050	A	F0	U	S1	M101
Model	Lead	Precision Grade	Effective Stroke	Slider Type	Motor Flange	Cover	Limit Switch	Motor
	5 mm 10 mm 20 mm	C: Normal P: Precision		A: Standard	F0 : Direct	U: Without Cover None : Standard Cover	S1: OMRON SX671 S2: OMRON SX674 S3: Panasonic GX-F12A S4: Panasonic GX-F12A-P None: No Limit Switch	M05□, K05□ M10□, K10□ Motor specification: ref. catalof P.167 M:customer specified None:Without Motor

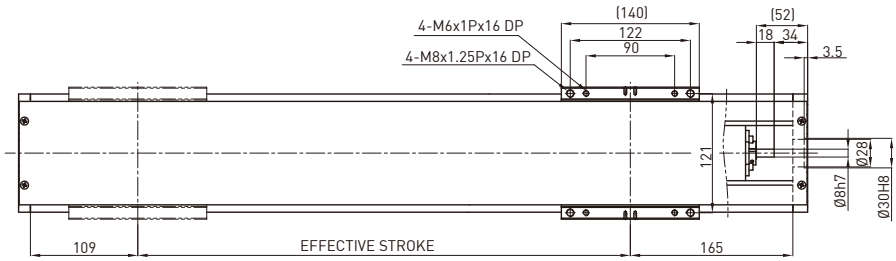

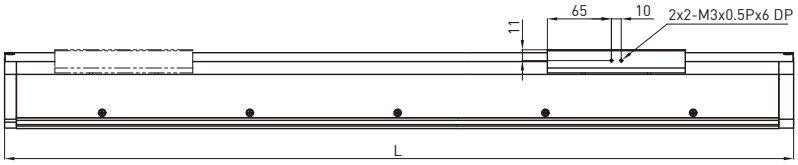

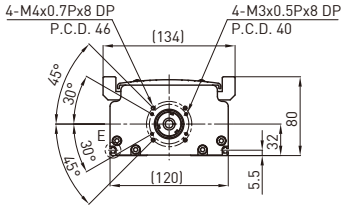

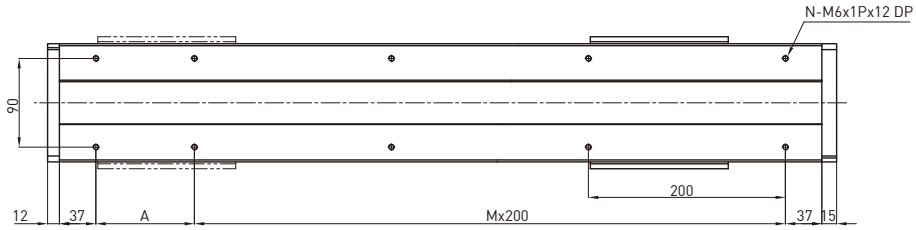

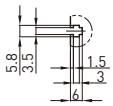

DETAIL E

Effective stroke (mm)	L	A	M	N	Weight (kg)
100	401	100	1	6	7.5
150	451	150	1	6	8.13
200	501	200	1	6	8.76
250	551	50	2	8	9.39
300	601	100	2	8	10.02
350	651	150	2	8	10.65
400	701	200	2	8	11.28
450	751	50	3	10	11.91
500	801	100	3	10	12.54
550	851	150	3	10	13.17
600	901	200	3	10	13.8
650	951	50	4	12	14.43
700	1001	100	4	12	15.06
750	1051	150	4	12	15.69
800	1101	200	4	12	16.32
850	1151	50	5	14	16.95
900	1201	100	5	14	17.58
950	1251	150	5	14	18.21
1000	1301	200	5	14	18.84
1050	1351	50	6	16	19.47

AC motor output		W	100		
Drive			Ballscrew C7(normal)		
Lead		mm	5	10	20
Rated RPM		RPM	3000	3000	3000
Max linear speed*		mm/sec	250	500	1000
Rated thrust		N	560	280	140
Repeatability		mm	±0.02		
Effective stroke		mm	100~1050		
Max load (H)		kg	50	32	20
Rated dynamic load**	Fyd	N	50	50	50
	Fzd	N	500	320	200
	Mxd	N-m	25	27	28
	Myd	N-m	20	22	23
	Mzd	N-m	20	22	23

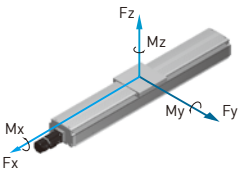

Permitted load condition***

$$\frac{Fy}{Fyd}+\frac{Fz}{Fzd}+\frac{Mx}{Mxd}+\frac{My}{Myd}+\frac{Mz}{Mzd}\leq 1$$

Fy, Fz, Mx, My, Mz are working loads

* Vibration might occur when the effective stroke is longer than 650mm.
The maximum speed should be decreased by 15% for every 100mm of increased stroke.
** The load condition is based on 10,000km operation.
*** If used on the vertical axis or in a special condition, please contact HIWIN.

Model Number for KA136

KA136	-20	P	-1050	A	F0	U	S1	M201
Model	Lead	Precision Grade	Effective Stroke	Slider Type	Motor Flange	Cover	Limit Switch	Motor
	5 mm 10 mm 20 mm	C: Normal P: Precision		A: Standard	F0 : Direct	U: Without Cover None : Standard Cover	S1: OMRON SX671 S2: OMRON SX674 S3: Panasonic GX-F12A S4: Panasonic GX-F12A-P None: No Limit Switch	M20□, K20□ M40□, K40□ Motor specification: ref. catalof P.167 M:customer specified None:Without Motor

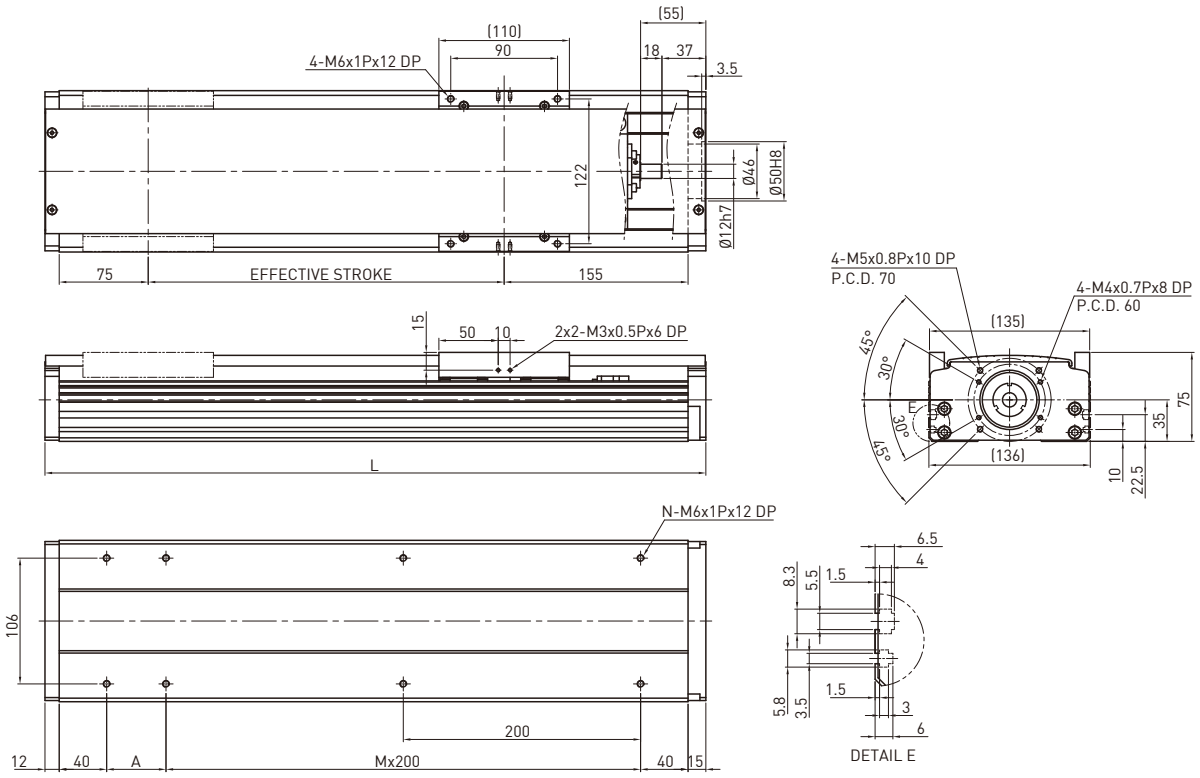

Effective stroke (mm)	L	A	M	N	Weight (kg)
100	357	50	1	6	6.19
150	407	100	1	6	6.74
200	457	150	1	6	7.29
250	507	200	1	6	7.84
300	557	50	2	8	8.39
350	607	100	2	8	8.94
400	657	150	2	8	9.49
450	707	200	2	8	10.05
500	757	50	3	10	10.6
550	807	100	3	10	11.15
600	857	150	3	10	11.7
650	907	200	3	10	12.25
700	957	50	4	12	12.8
750	1007	100	4	12	13.35
800	1057	150	4	12	13.9
850	1107	200	4	12	14.45
900	1157	50	5	14	15
950	1207	100	5	14	15.55
1000	1257	150	5	14	16.1
1050	1307	200	5	14	16.65

AC motor output		W	200		
Drive			Ballscrew C7(normal)		
Lead		mm	5	10	20
Rated RPM		RPM	3000	3000	3000
Max linear speed*		mm/sec	250	500	1000
Rated thrust		N	560	280	140
Repeatability		mm	±0.02		
Effective stroke		mm	100~1050		
Max load (H)		kg	95	75	40
Rated dynamic load**	Fyd	N	50	50	50
	Fzd	N	950	750	400
	Mxd	N-m	21	21	26
	Myd	N-m	17	17	21
	Mzd	N-m	17	17	21

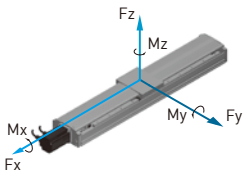

Permitted load condition* :

$$\frac{Fy}{Fyd}+\frac{Fz}{Fzd}+\frac{Mx}{Mxd}+\frac{My}{Myd}+\frac{Mz}{Mzd}\leq 1$$

Fy, Fz, Mx, My, Mz are working loads

* Vibration might occur when the effective stroke is longer than 650mm.
The maximum speed should be decreased by 15% for every 100mm of increased stroke.
** The load condition is based on 10,000km operation.
*** If used on the vertical axis or in a special condition, please contact HIWIN.

Model Number for KA136-FD

KA136	-20	P	-1050	A	FD	U	S1	M201
Model	Lead	Precision Grade	Effective Stroke	Slider Type	Motor Flange	Cover	Limit Switch	Motor
	5 mm 10 mm 20 mm	C: Normal P: Precision		A: Standard	FD: Bottom	U: Without Cover None : Standard Cover	S1: OMRON SX671 S2: OMRON SX674 S3: Panasonic GX-F12A S4: Panasonic GX-F12A-P None: No Limit Switch	M20□, K20□ M40□, K40□ Motor specification: ref. catalof P.167 M:customer specified None:Without Motor

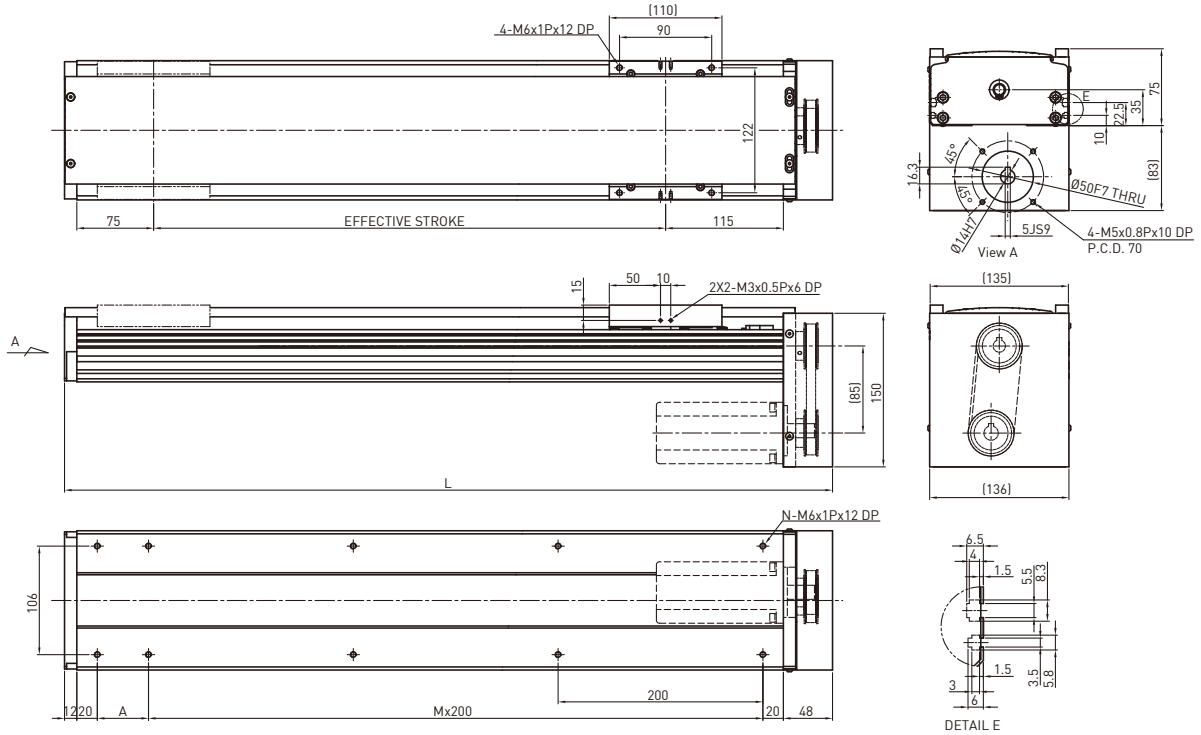

Effective stroke (mm)	L	A	M	N	Weight (kg)
100	350	50	1	6	6.31
150	400	100	1	6	6.88
200	450	150	1	6	7.44
250	500	200	1	6	8.01
300	550	50	2	8	8.56
350	600	100	2	8	9.12
400	650	150	2	8	9.68
450	700	200	2	8	10.25
500	750	50	3	10	10.81
550	800	100	3	10	11.37
600	850	150	3	10	11.94
650	900	200	3	10	12.51
700	950	50	4	12	13.06
750	1000	100	4	12	13.62
800	1050	150	4	12	14.18
850	1100	200	4	12	14.74
900	1150	50	5	14	15.3
950	1200	100	5	14	15.86
1000	1250	150	5	14	16.42
1050	1300	200	5	14	16.98

AC motor output		W	200		
Drive			Ballscrew C7(normal)		
Lead		mm	5	10	20
Rated RPM		RPM	3000	3000	3000
Max linear speed*		mm/sec	250	500	1000
Rated thrust		N	560	280	140
Repeatability		mm	±0.02		
Effective stroke		mm	100~1050		
Max load (H)		kg	95	75	40
Rated dynamic load**	Fyd	N	50	50	50
	Fzd	N	950	750	400
	Mxd	N-m	21	21	26
	Myd	N-m	17	17	21
	Mzd	N-m	17	17	21

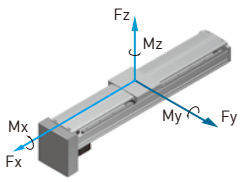

Permitted load condition* **

$$\frac{Fy}{Fyd}+\frac{Fz}{Fzd}+\frac{Mx}{Mxd}+\frac{My}{Myd}+\frac{Mz}{Mzd}\leq 1$$

Fy, Fz, Mx, My, Mz are working loads

* Vibration might occur when the effective stroke is longer than 650mm.
The maximum speed should be decreased by 15% for every 100mm of increased stroke.
** The load condition is based on 10,000km operation.
*** If used on the vertical axis or in a special condition, please contact HIWIN.

Model Number for KA136-FI

KA136	-20	P	-1050	A	FI	U	S1	M201
Model	Lead	Precision Grade	Effective Stroke	Slider Type	Motor Flange	Cover	Limit Switch	Motor
	5 mm 10 mm 20 mm	C: Normal P: Precision		A: Standard	FI : Internal	U: Without Cover None : Standard Cover	S1: OMRON SX671 S2: OMRON SX674 S3: Panasonic GX-F12A S4: Panasonic GX-F12A-P None: No Limit Switch	M20□, K20□ M40□, K40□ Motor specification: ref. catalof P.167 M:customer specified None:Without Motor

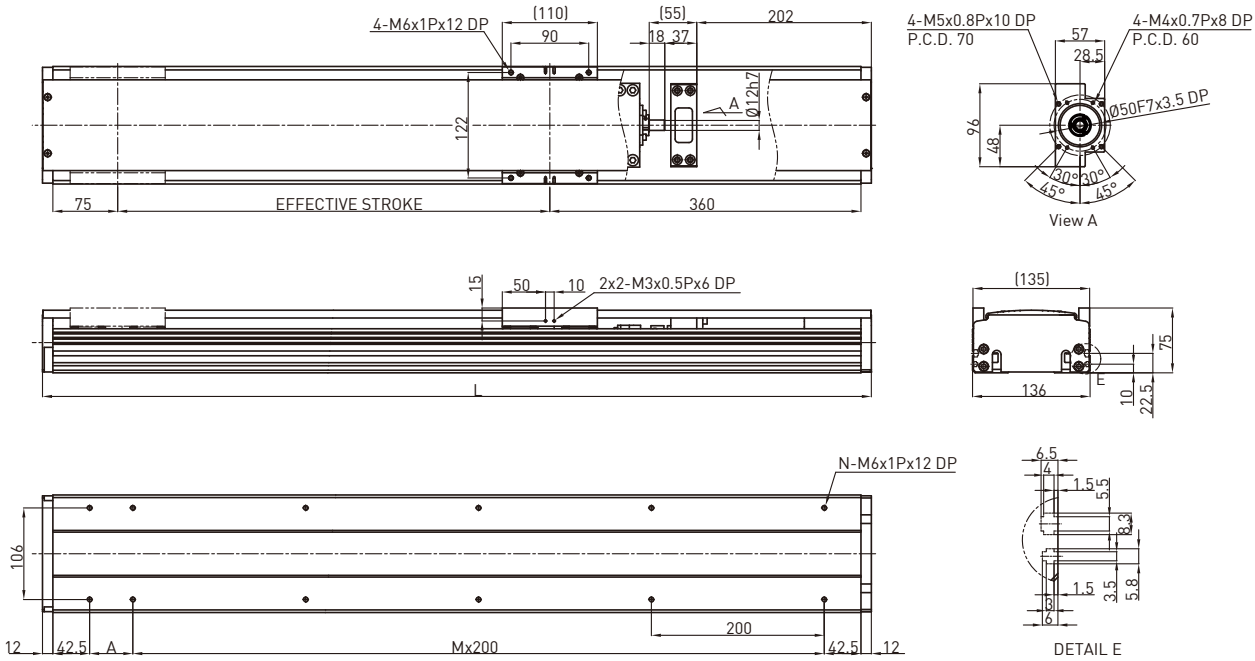

Effective stroke (mm)	L	A	M	N	Weight (kg)
100	559	50	2	8	6.62
150	609	100	2	8	7.21
200	659	150	2	8	7.8
250	709	200	2	8	8.39
300	759	50	3	10	8.98
350	809	100	3	10	9.57
400	859	150	3	10	10.15
450	909	200	3	10	10.75
500	959	50	4	12	11.34
550	1009	100	4	12	11.93
600	1059	150	4	12	12.52
650	1109	200	4	12	13.11
700	1159	50	5	14	13.71
750	1209	100	5	14	14.29
800	1259	150	5	14	14.87
850	1309	200	5	14	15.46
900	1359	50	6	16	16.05
950	1409	100	6	16	16.64
1000	1459	150	6	16	17.23
1050	1509	200	6	16	17.82

AC motor output		W	200		
Drive			Ballscrew C7(normal)		
Lead		mm	5	10	20
Rated RPM		RPM	3000	3000	3000
Max linear speed*		mm/sec	250	500	1000
Rated thrust		N	560	280	140
Repeatability		mm	±0.02		
Effective stroke		mm	100~1050		
Max load (H)		kg	95	75	40
Rated dynamic load**	Fyd	N	50	50	50
	Fzd	N	950	750	400
	Mxd	N-m	21	21	26
	Myd	N-m	17	17	21
	Mzd	N-m	17	17	21

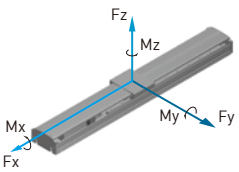

Permitted load condition***

$$\frac{Fy}{Fyd}+\frac{Fz}{Fzd}+\frac{Mx}{Mxd}+\frac{My}{Myd}+\frac{Mz}{Mzd}\leq 1$$

Fy, Fz, Mx, My, Mz are working loads

* Vibration might occur when the effective stroke is longer than 650mm.
The maximum speed should be decreased by 15% for every 100mm of increased stroke.
** The load condition is based on 10,000km operation.
*** If used on the vertical axis or in a special condition, please contact HIWIN.

Model Number for KA136-FL

KA136	-20	P	-1050	A	FL	U	S1	M201
Model	Lead	Precision Grade	Effective Stroke	Slider Type	Motor Flange	Cover	Limit Switch	Motor
	5 mm 10 mm 20 mm	C: Normal P: Precision		A: Standard	FL: Left	U: Without Cover None : Standard Cover	S1: OMRON SX671 S2: OMRON SX674 S3: Panasonic GX-F12A S4: Panasonic GX-F12A-P None: No Limit Switch	M20□, K20□ M40□, K40□ Motor specification: ref. catalof P.167 M:customer specified None:Without Motor

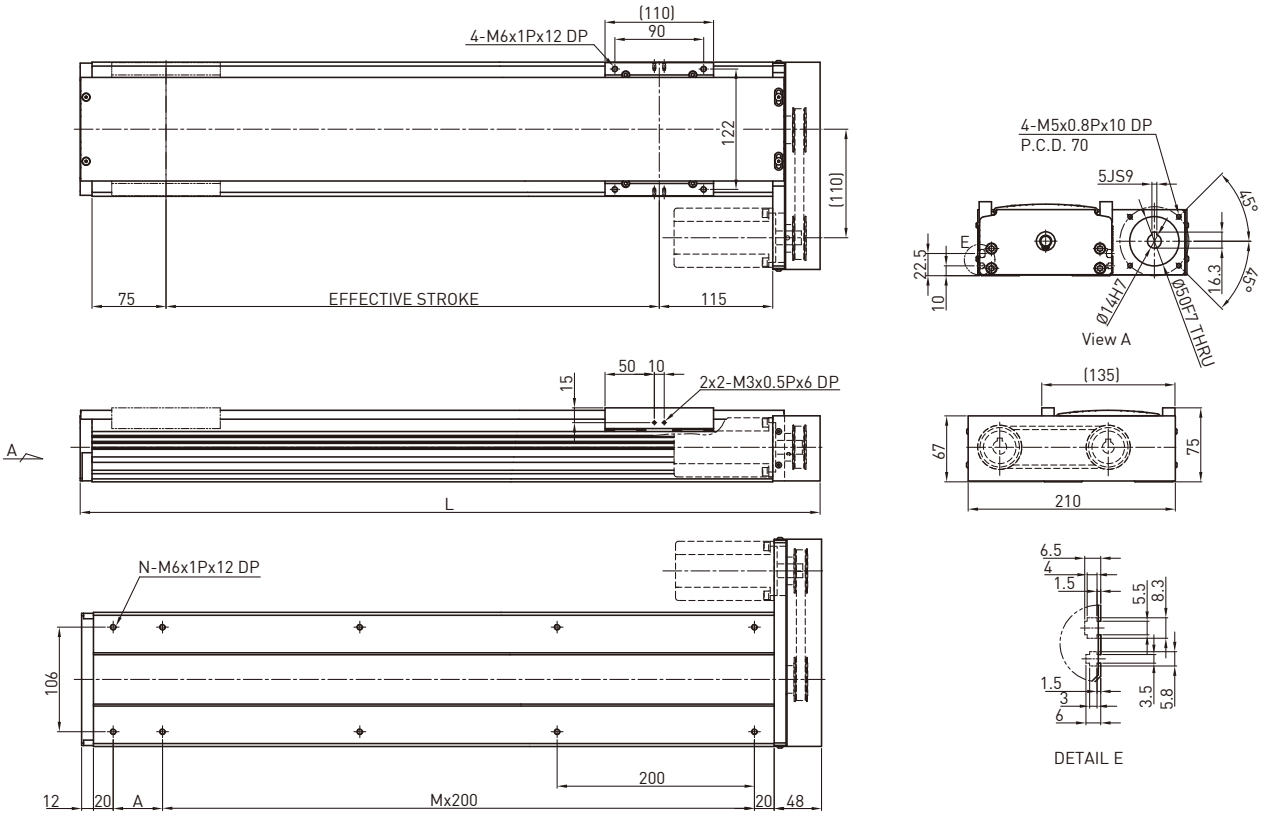

Effective stroke (mm)	L	A	M	N	Weight (kg)
100	350	50	1	6	6.31
150	400	100	1	6	6.88
200	450	150	1	6	7.44
250	500	200	1	6	8.01
300	550	50	2	8	8.56
350	600	100	2	8	9.12
400	650	150	2	8	9.68
450	700	200	2	8	10.25
500	750	50	3	10	10.81
550	800	100	3	10	11.37
600	850	150	3	10	11.94
650	900	200	3	10	12.51
700	950	50	4	12	13.06
750	1000	100	4	12	13.62
800	1050	150	4	12	14.18
850	1100	200	4	12	14.74
900	1150	50	5	14	15.3
950	1200	100	5	14	15.86
1000	1250	150	5	14	16.42
1050	1300	200	5	14	16.98

AC motor output		W	200		
Drive			Ballscrew C7(normal)		
Lead		mm	5	10	20
Rated RPM		RPM	3000	3000	3000
Max linear speed*		mm/sec	250	500	1000
Rated thrust		N	560	280	140
Repeatability		mm	±0.02		
Effective stroke		mm	100~1050		
Max load (H)		kg	95	75	40
Rated dynamic load**	Fyd	N	50	50	50
	Fzd	N	950	750	400
	Mxd	N-m	21	21	26
	Myd	N-m	17	17	21
	Mzd	N-m	17	17	21

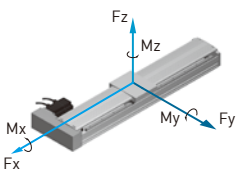

Permitted load condition* :**

$$\frac{Fy}{Fyd}+\frac{Fz}{Fzd}+\frac{Mx}{Mxd}+\frac{My}{Myd}+\frac{Mz}{Mzd}\leq 1$$

Fy, Fz, Mx, My, Mz are working loads

* Vibration might occur when the effective stroke is longer than 650mm.
The maximum speed should be decreased by 15% for every 100mm of increased stroke.
** The load condition is based on 10,000km operation.
*** If used on the vertical axis or in a special condition, please contact HIWIN.

Model Number for KA136-FR

KA136	-20	P	-1050	A	FR	U	S1	M201
Model	Lead	Precision Grade	Effective Stroke	Slider Type	Motor Flange	Cover	Limit Switch	Motor
	5 mm 10 mm 20 mm	C: Normal P: Precision		A: Standard	FR: Right	U: Without Cover None : Standard Cover	S1: OMRON SX671 S2: OMRON SX674 S3: Panasonic GX-F12A S4: Panasonic GX-F12A-P None: No Limit Switch	M20□, K20□ M40□, K40□ Motor specification: ref. catalof P.167 M:customer specified None:Without Motor

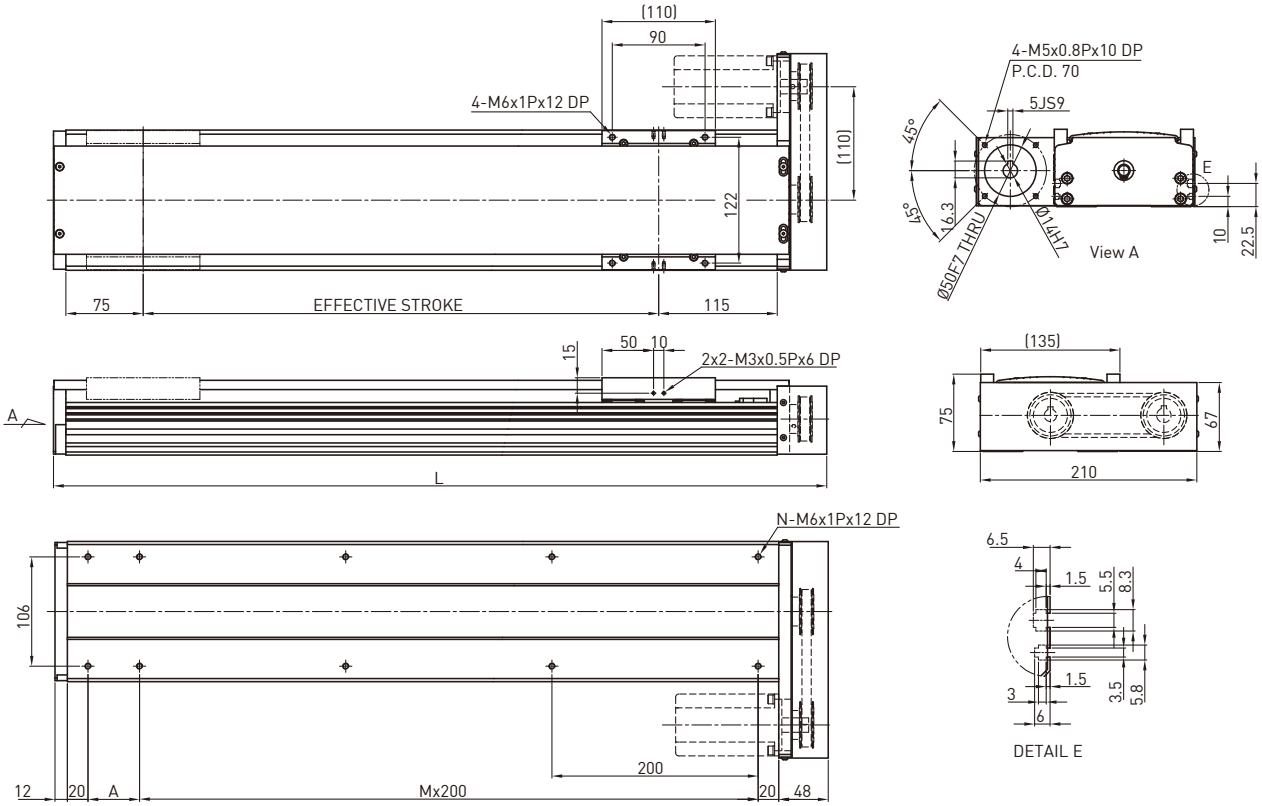

Effective stroke (mm)	L	A	M	N	Weight (kg)
100	350	50	1	6	6.31
150	400	100	1	6	6.88
200	450	150	1	6	7.44
250	500	200	1	6	8.01
300	550	50	2	8	8.56
350	600	100	2	8	9.12
400	650	150	2	8	9.68
450	700	200	2	8	10.25
500	750	50	3	10	10.81
550	800	100	3	10	11.37
600	850	150	3	10	11.94
650	900	200	3	10	12.51
700	950	50	4	12	13.06
750	1000	100	4	12	13.62
800	1050	150	4	12	14.18
850	1100	200	4	12	14.74
900	1150	50	5	14	15.3
950	1200	100	5	14	15.86
1000	1250	150	5	14	16.42
1050	1300	200	5	14	16.98

AC motor output		W	200		
Drive			Ballscrew C7(normal)		
Lead		mm	5	10	20
Rated RPM		RPM	3000	3000	3000
Max linear speed*		mm/sec	250	500	1000
Rated thrust		N	560	280	140
Repeatability		mm	±0.02		
Effective stroke		mm	100~1050		
Max load (H)		kg	95	75	40
Rated dynamic load**	Fyd	N	50	50	50
	Fzd	N	950	750	400
	Mxd	N-m	21	21	26
	Myd	N-m	17	17	21
	Mzd	N-m	17	17	21

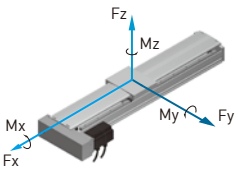

Permitted load condition***

$$\frac{Fy}{Fyd}+\frac{Fz}{Fzd}+\frac{Mx}{Mxd}+\frac{My}{Myd}+\frac{Mz}{Mzd}\leq 1$$

Fy, Fz, Mx, My, Mz are working loads

* Vibration might occur when the effective stroke is longer than 650mm.
The maximum speed should be decreased by 15% for every 100mm of increased stroke.
** The load condition is based on 10,000km operation.
*** If used on the vertical axis or in a special condition, please contact HIWIN.

Model Number for KA136B-FL

KA136	B	-120	C	-3000	A	FL	U	S1	M201
Model	Timing Belt	Pulley Perimeter	Precision Grade	Effective Stroke	Slider Type	Motor Flange	Cover	Limit Switch	Motor
			C: Normal		A: Standard	FL: Left	U: Without Cover None : Standard Cover	S1: OMRON SX671 S2: OMRON SX674 S3: Panasonic GX-F12A S4: Panasonic GX-F12A-P None: No Limit Switch	M20□, K20□ M40□, K40□ Motor specification: ref. catalof P.167 M:customer specified None:Without Motor

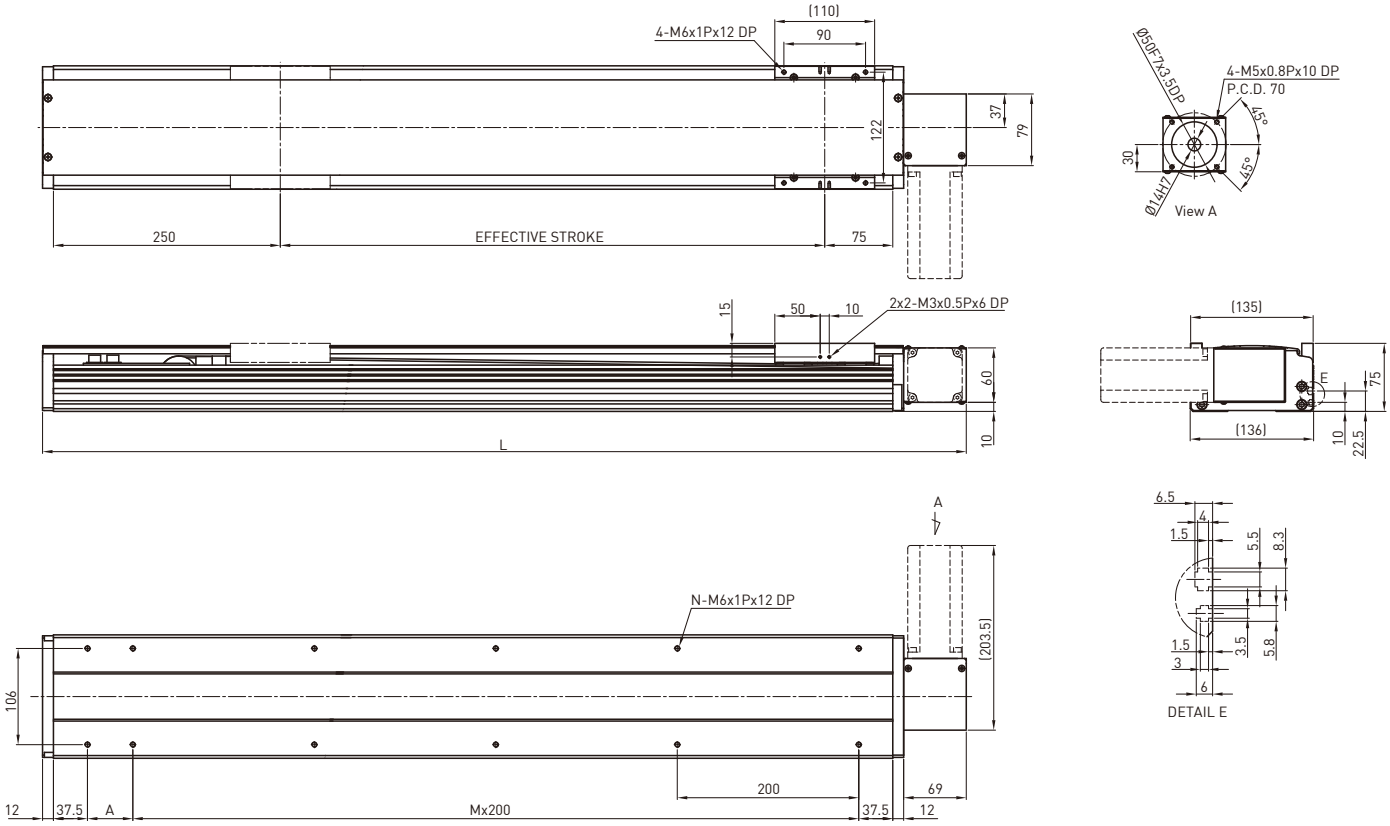

Effective stroke (mm)	L	A	M	N	Weight (kg)
200	618	50	2	8	6.97
400	818	50	3	10	8.93
600	1018	50	4	12	11.01
800	1218	50	5	14	12.97
1000	1418	50	6	16	14.93
1200	1618	50	7	18	16.99
1400	1818	50	8	20	18.95
1600	2018	50	9	22	21.01
1800	2218	50	10	24	22.97
2000	2418	50	11	26	24.93
2200	2618	50	12	28	26.99
2400	2818	50	13	30	28.95
2600	3018	50	14	32	31.01
2800	3218	50	15	34	32.97
3000	3418	50	16	36	34.93

AC motor output		W	200
Drive			Timing Belt
Pulley Perimeter		mm	120
Pulley RPM		RPM	900
Max linear speed		mm/sec	1800
Rated thrust		N	67
Repeatability		mm	±0.1
Effective stroke		mm	200~3000
Max load (H)		kg	15
Rated dynamic load*	Fyd	N	50
	Fzd	N	150
	Mxd	N-m	29
	Myd	N-m	24
	Mzd	N-m	24
Permitted load condition**	$\frac{Fy}{Fyd}+\frac{Fz}{Fzd}+\frac{Mx}{Mxd}+\frac{My}{Myd}+\frac{Mz}{Mzd}\leq 1$ Fy, Fz, Mx, My, Mz are working loads		

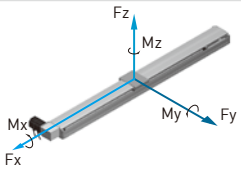

*The load condition is based on 10,000km operation.
**For horizontal applications only. If used in a special condition, please contact HIWIN.

Model Number for KA136B-FR

KA136	B	-120	C	-3000	A	FR	U	S1	M201
Model	Timing Belt	Pulley Perimeter	Precision Grade	Effective Stroke	Slider Type	Moto Flange	Cover	Limit Switch	Motor
			C: Normal		A: Standard	FR: Right	U: Without Cover None : Standard Cover	S1: OMRON SX671 S2: OMRON SX674 S3: Panasonic GX-F12A S4: Panasonic GX-F12A-P None: No Limit Switch	M20□, K20□ M40□, K40□ Motor specification: ref. catalof P.167 M:customer specified None:Without Motor

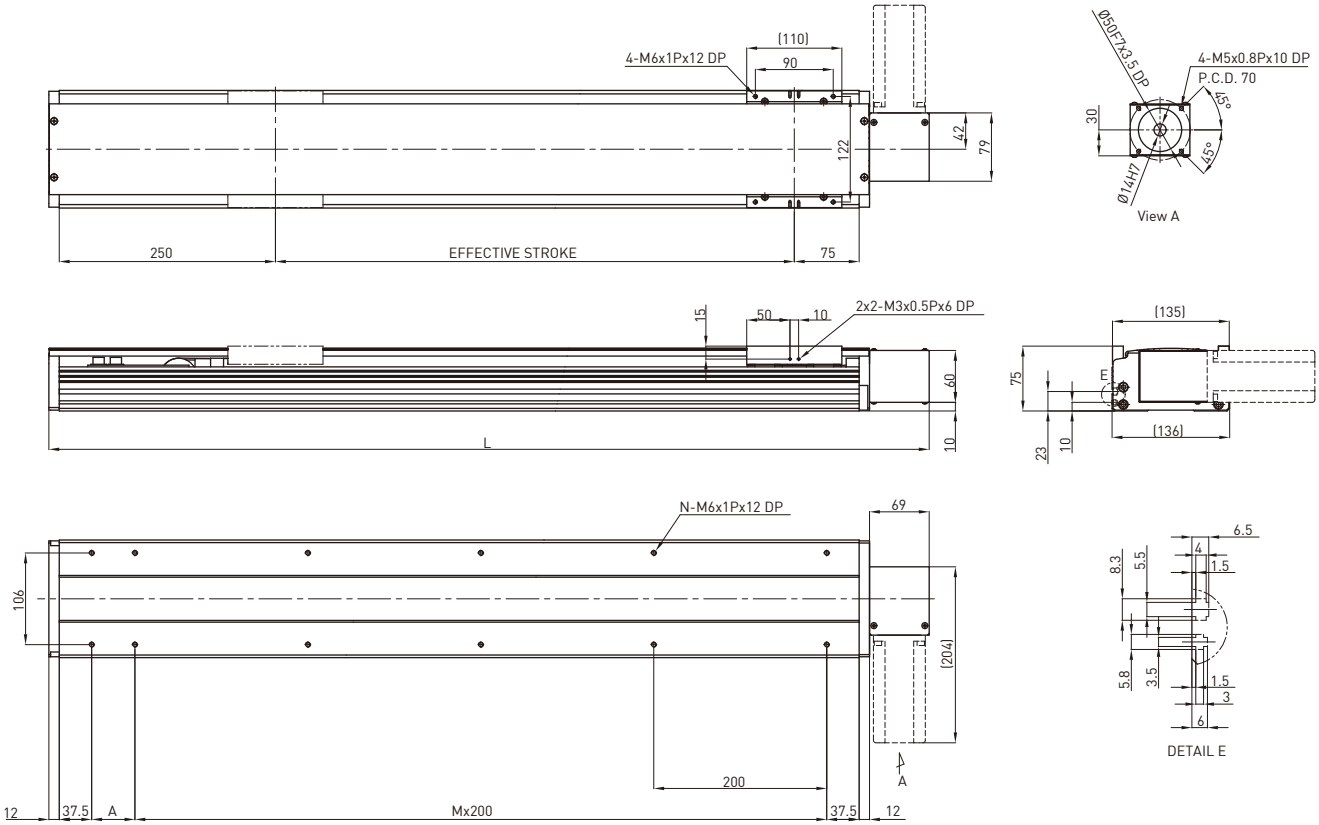

Effective stroke (mm)	L	A	M	N	Weight (kg)
200	618	50	2	8	6.97
400	818	50	3	10	8.93
600	1018	50	4	12	11.01
800	1218	50	5	14	12.97
1000	1418	50	6	16	14.93
1200	1618	50	7	18	16.99
1400	1818	50	8	20	18.95
1600	2018	50	9	22	21.01
1800	2218	50	10	24	22.97
2000	2418	50	11	26	24.93
2200	2618	50	12	28	26.99
2400	2818	50	13	30	28.95
2600	3018	50	14	32	31.01
2800	3218	50	15	34	32.97
3000	3418	50	16	36	34.93

AC motor output		W	200
Drive			Timing Belt
Pulley Perimeter		mm	120
Pulley RPM		RPM	900
Max linear speed		mm/sec	1800
Rated thrust		N	67
Repeatability		mm	±0.1
Effective stroke		mm	200~3000
Max load (H)		kg	15
Rated dynamic load*	Fyd	N	50
	Fzd	N	150
	Mxd	N-m	29
	Myd	N-m	24
	Mzd	N-m	24
Permitted load condition**	$\frac{Fy}{Fyd}+\frac{Fz}{Fzd}+\frac{Mx}{Mxd}+\frac{My}{Myd}+\frac{Mz}{Mzd}\leq 1$ Fy, Fz, Mx, My, Mz are working loads		

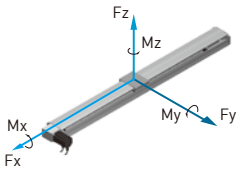

*The load condition is based on 10,000km operation.
**For horizontal applications only. If used in a special condition, please contact HIWIN.

Model Number for KA150

KA150	-10	P	-1250	A	F0	U	S1	M201
Model	Lead	Precision Grade	Effective Stroke	Slider Type	Motor Flange	Cover	Limit Switch	Motor
	10 mm 20 mm	C: Normal P: Precision		A: Standard	F0 : Direct	U: Without Cover None : Standard Cover	S1: OMRON SX671 S2: OMRON SX674 S3: Panasonic GX-F12A S4: Panasonic GX-F12A-P None: No Limit Switch	M20□, K20□ M40□, K40□ Motor specification: ref. catalof P.167 M:customer specified None:Without Motor

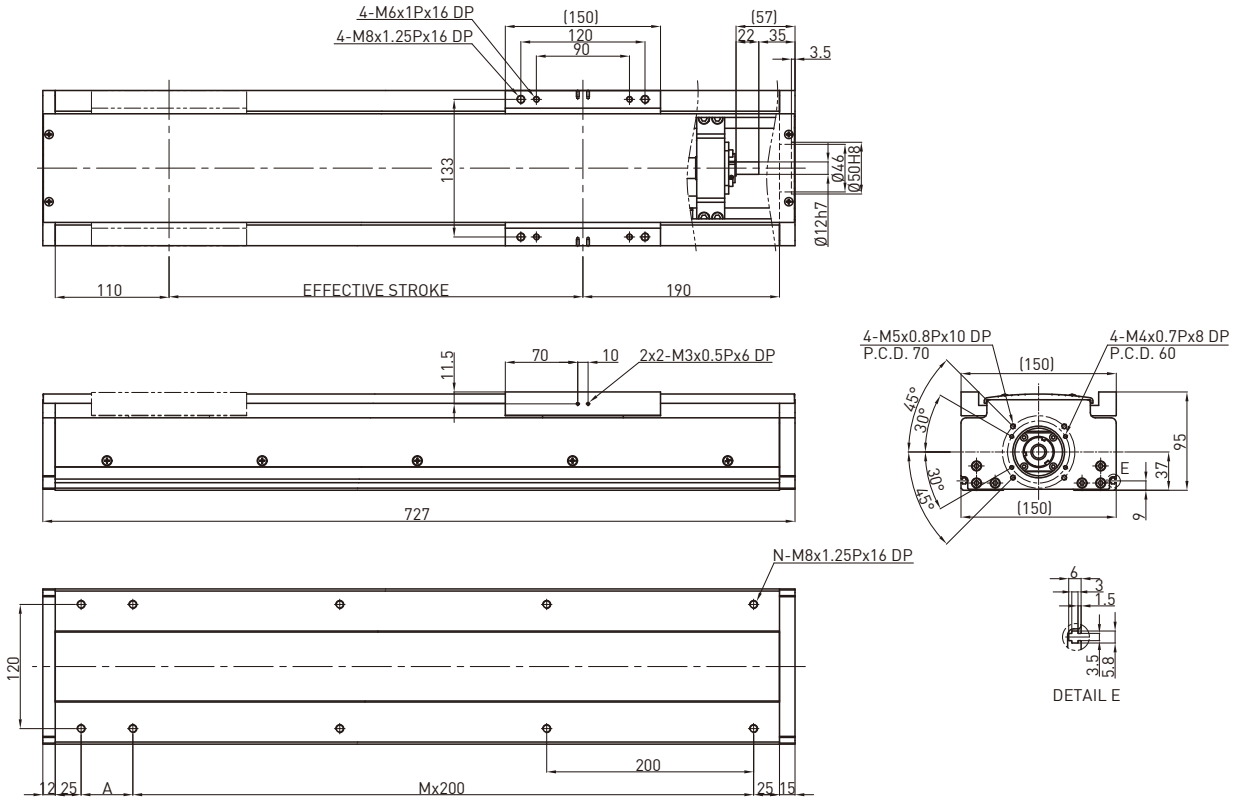

Effective stroke (mm)	L	A	M	N	Weight (kg)
150	477	200	1	6	12.71
200	527	50	2	8	13.59
250	577	100	2	8	14.47
300	627	150	2	8	15.35
350	677	200	2	8	16.23
400	727	50	3	10	17.11
450	777	100	3	10	17.99
500	827	150	3	10	18.87
550	877	200	3	10	19.75
600	927	50	4	12	20.63
650	977	100	4	12	21.51
700	1027	150	4	12	22.39
750	1077	200	4	12	23.27
800	1127	50	5	14	24.15
850	1177	100	5	14	25.03
900	1227	150	5	14	25.91
950	1277	200	5	14	26.79
1000	1327	50	6	16	27.67
1050	1377	100	6	16	28.55
1100	1427	150	6	16	29.43
1150	1477	200	6	16	30.31
1200	1527	50	7	18	31.19
1250	1577	100	7	18	32.07

AC motor output		W	200	
Drive			Ballscrew C7(normal)	
Lead		mm	10	20
Rated RPM		RPM	3000	3000
Max linear speed*		mm/sec	500	1000
Rated thrust		N	280	140
Repeatability		mm	±0.02	
Effective stroke		mm	150~1250	
Max load (H)		kg	80	40
Rated dynamic load**	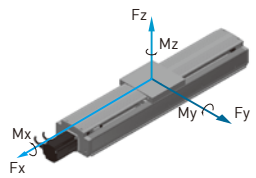	Fyd	N	50	50
		Fzd	N	800	400
		Mxd	N-m	56	63
		Myd	N-m	49	53
		Mzd	N-m	49	53
Permitted load condition***	$\frac{Fy}{Fyd}+\frac{Fz}{Fzd}+\frac{Mx}{Mxd}+\frac{My}{Myd}+\frac{Mz}{Mzd}\leq 1$ Fy, Fz, Mx, My, Mz are working loads			

* Vibration might occur when the effective stroke is longer than 650mm.
The maximum speed should be decreased by 15% for every 100mm of increased stroke.
** The load condition is based on 10,000km operation.
*** If used on the vertical axis or in a special condition, please contact HIWIN.

Model Number for KA170

KA170	-20	P	-1250	A	F0	U	S1	M401
Model	Lead	Precision Grade	Effective Stroke	Slider Type	Motor Flange	Cover	Limit Switch	Motor
	10 mm 20 mm	C: Normal P: Precision		A: Standard	F0 : Direct	U: Without Cover None : Standard Cover	S1: OMRON SX671 S2: OMRON SX674 S3: Panasonic GX-F12A S4: Panasonic GX-F12A-P None: No Limit Switch	M40□, K40□ M75□, K75□ Motor specification: ref. catalof P.167 M:customer specified None:Without Motor

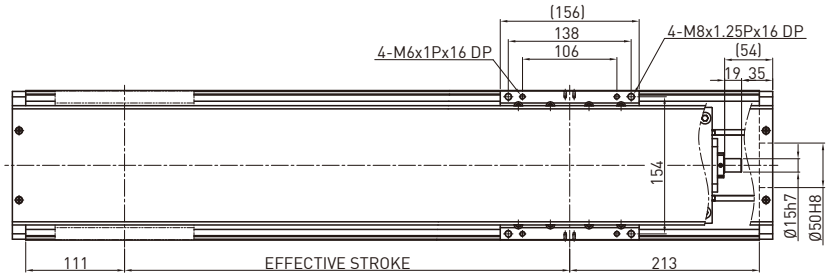

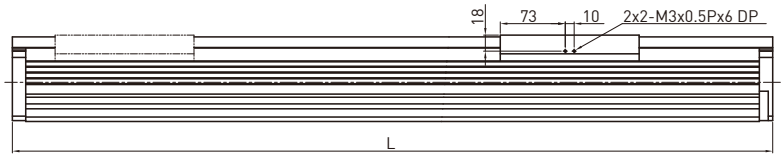

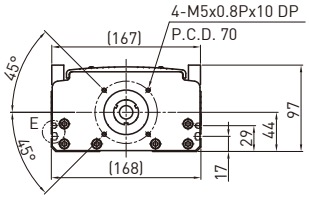

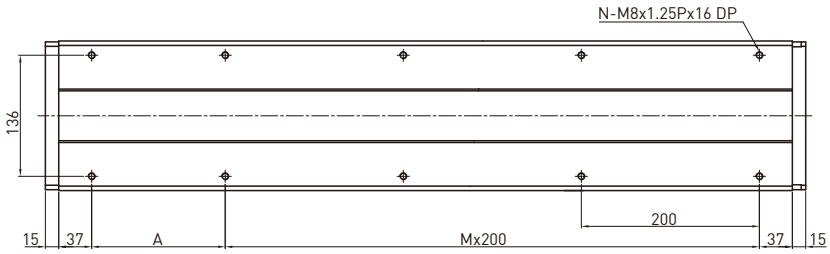

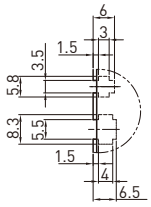

DETAIL E

Effective stroke (mm)	L	A	M	N	Weight (kg)
150	504	200	1	6	14.57
200	554	50	2	8	15.45
250	604	100	2	8	16.33
300	654	150	2	8	17.21
350	704	200	2	8	18.09
400	754	50	3	10	18.97
450	804	100	3	10	19.85
500	854	150	3	10	20.73
550	904	200	3	10	21.61
600	954	50	4	12	22.49
650	1004	100	4	12	23.37
700	1054	150	4	12	24.25
750	1104	200	4	12	25.13
800	1154	50	5	14	26.01
850	1204	100	5	14	26.89
900	1254	150	5	14	27.77
950	1304	200	5	14	28.65
1000	1354	50	6	16	29.53
1050	1404	100	6	16	30.41
1100	1454	150	6	16	31.29
1150	1504	200	6	16	32.17
1200	1554	50	7	18	33.05
1250	1604	100	7	18	33.92

AC motor output		W	400	
Drive			Ballscrew C7(normal)	
Lead		mm	10	20
Rated RPM		RPM	3000	3000
Max linear speed*		mm/sec	500	1000
Rated thrust		N	560	280
Repeatability		mm	±0.02	
Effective stroke		mm	150~1250	
Max load (H)		kg	125	75
Rated dynamic load**	Fyd	N	50	50
	Fzd	N	1250	750
	Mxd	N-m	100	110
	Myd	N-m	85	90
	Mzd	N-m	85	90

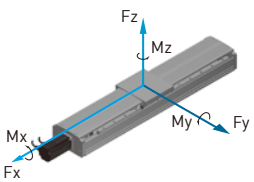

Permitted load condition* :

$$\frac{Fy}{Fyd}+\frac{Fz}{Fzd}+\frac{Mx}{Mxd}+\frac{My}{Myd}+\frac{Mz}{Mzd}\leq 1$$

Fy, Fz, Mx, My, Mz are working loads

* Vibration might occur when the effective stroke is longer than 650mm.
The maximum speed should be decreased by 15% for every 100mm of increased stroke.
** The load condition is based on 10,000km operation.
*** If used on the vertical axis or in a special condition, please contact HIWIN.

Model Number for KA170-FD

KA170	-20	P	-1250	A	FD	U	S1	M401
Model	Lead	Precision Grade	Effective Stroke	Slider Type	Motor Flange	Cover	Limit Switch	Motor
	10 mm 20 mm	C: Normal P: Precision		A: Standard	FD: Bottom	U: Without Cover None : Standard Cover	S1: OMRON SX671 S2: OMRON SX674 S3: Panasonic GX-F12A S4: Panasonic GX-F12A-P None: No Limit Switch	M40□ K40□ Motor specification: ref. catalof P.167 M:customer specified None:Without Motor

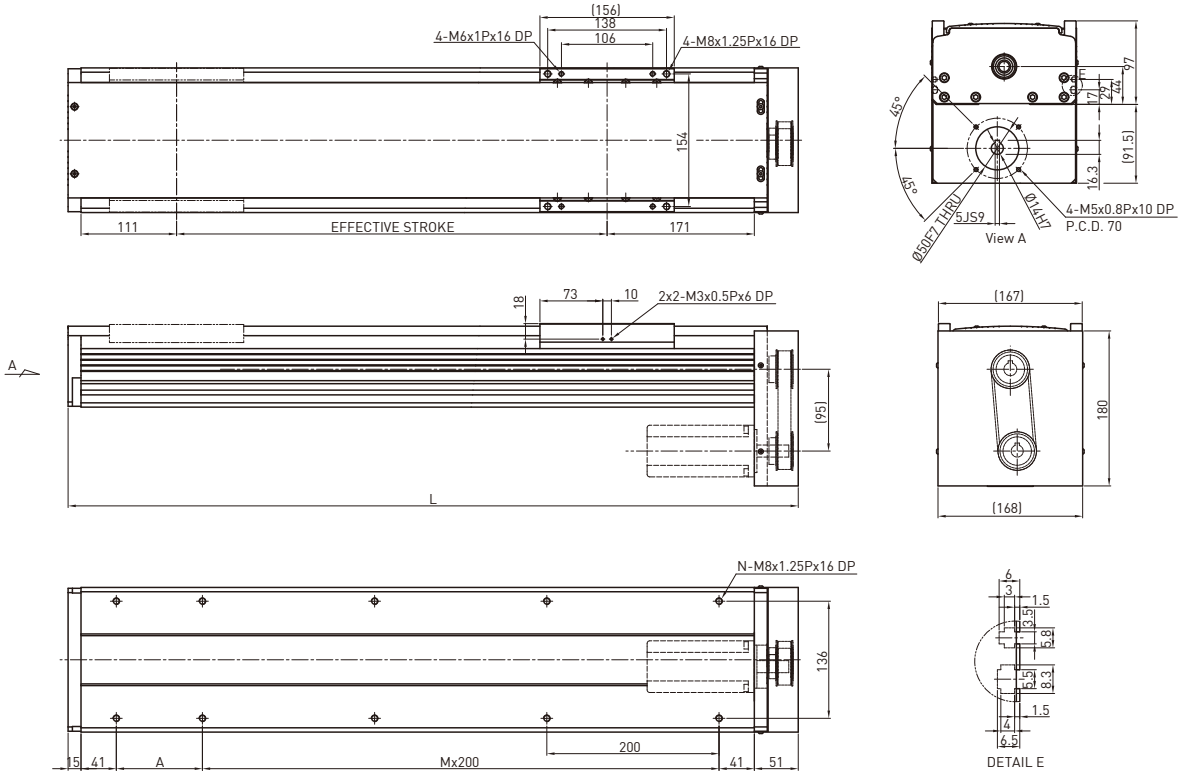

Effective stroke (mm)	L	A	M	N	Weight (kg)
150	498	150	1	6	15.01
200	548	200	1	6	15.92
250	598	50	2	8	16.82
300	648	100	2	8	17.73
350	698	150	2	8	18.63
400	748	200	2	8	19.54
450	798	50	3	10	20.45
500	848	100	3	10	21.35
550	898	150	3	10	22.26
600	948	200	3	10	23.17
650	998	50	4	12	24.07
700	1048	100	4	12	24.98
750	1098	150	4	12	25.89
800	1148	200	4	12	26.79
850	1198	50	5	14	27.71
900	1248	100	5	14	28.61
950	1298	150	5	14	29.51
1000	1348	200	5	14	30.42
1050	1398	50	6	16	31.33
1100	1448	100	6	16	32.23
1150	1498	150	6	16	33.14
1200	1548	200	6	16	34.04
1250	1598	50	7	18	34.94

AC motor output		W	400	
Drive			Ballscrew C7(normal)	
Lead		mm	10	20
Rated RPM		RPM	3000	3000
Max linear speed*		mm/sec	500	1000
Rated thrust		N	560	280
Repeatability		mm	±0.02	
Effective stroke		mm	150~1250	
Max load (H)		kg	125	75
Rated dynamic load**	Fyd	N	50	50
	Fzd	N	1250	750
	Mxd	N-m	100	110
	Myd	N-m	85	90
	Mzd	N-m	85	90
Permitted load condition***	$\frac{Fy}{Fyd}+\frac{Fz}{Fzd}+\frac{Mx}{Mxd}+\frac{My}{Myd}+\frac{Mz}{Mzd}\leq 1$ Fy, Fz, Mx, My, Mz are working loads			

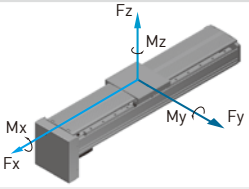

* Vibration might occur when the effective stroke is longer than 650mm.
The maximum speed should be decreased by 15% for every 100mm of increased stroke.
** The load condition is based on 10,000km operation.
*** If used on the vertical axis or in a special condition, please contact HIWIN.

Model Number for KA170-FI

KA170	-20	P	-1250	A	FI	U	S1	M401
Model	Lead	Precision Grade	Effective Stroke	Slider Type	Motor Flange	Cover	Limit Switch	Motor
	10 mm 20 mm	C: Normal P: Precision		A: Standard	FI : Internal	U: Without Cover None : Standard Cover	S1: OMRON SX671 S2: OMRON SX674 S3: Panasonic GX-F12A S4: Panasonic GX-F12A-P None: No Limit Switch	M40□ K40□ Motor specification: ref. catalof P.167 M:customer specified None:Without Motor

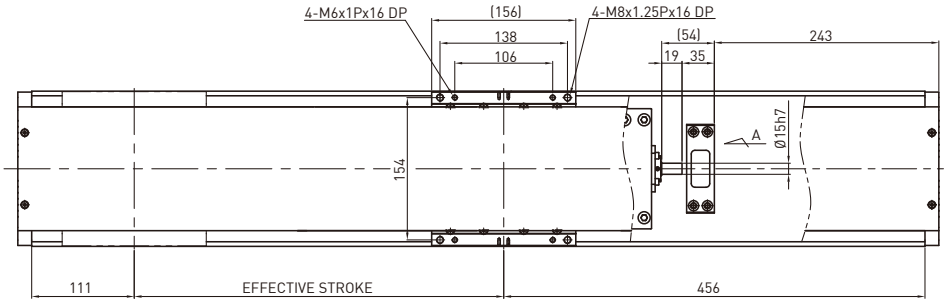

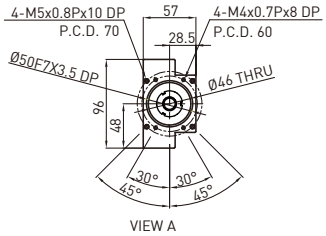

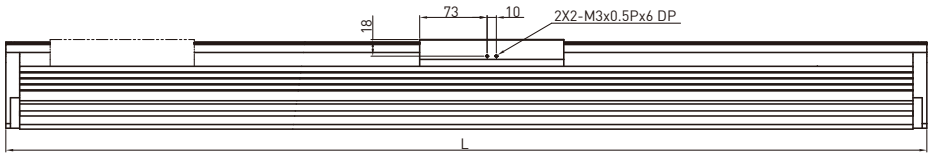

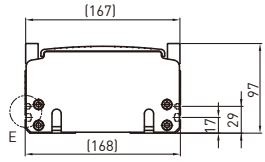

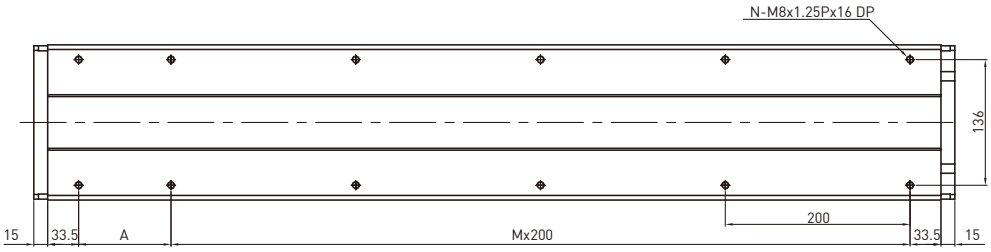

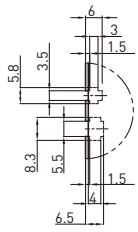

Effective stroke (mm)	L	A	M	N	Weight (kg)
150	747	50	3	10	15.59
200	797	100	3	10	16.53
250	847	150	3	10	17.47
300	897	200	3	10	18.42
350	947	50	4	12	19.36
400	997	100	4	12	20.31
450	1047	150	4	12	23.24
500	1097	200	4	12	22.18
550	1147	50	5	14	23.12
600	1197	100	5	14	24.06
650	1247	150	5	14	25.01
700	1297	200	5	14	25.95
750	1347	50	6	16	26.89
800	1397	100	6	16	27.83
850	1447	150	6	16	28.77
900	1497	200	6	16	29.71
950	1547	50	7	18	30.66
1000	1597	100	7	18	31.61
1050	1647	150	7	18	32.54
1100	1697	200	7	18	33.48
1150	1747	50	8	20	34.42
1200	1797	100	8	20	35.36
1250	1847	150	8	20	36.31

AC motor output		W	400	
Drive			Ballscrew C7(normal)	
Lead		mm	10	20
Rated RPM		RPM	3000	3000
Max linear speed*		mm/sec	500	1000
Rated thrust		N	560	280
Repeatability		mm	±0.02	
Effective stroke		mm	150~1250	
Max load (H)		kg	125	75
Rated dynamic load**	Fyd	N	50	50
	Fzd	N	1250	750
	Mxd	N-m	100	110
	Myd	N-m	85	90
	Mzd	N-m	85	90

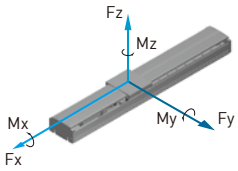

Permitted load condition* :

$$\frac{Fy}{Fyd}+\frac{Fz}{Fzd}+\frac{Mx}{Mxd}+\frac{My}{Myd}+\frac{Mz}{Mzd}\leq 1$$

Fy, Fz, Mx, My, Mz are working loads

* Vibration might occur when the effective stroke is longer than 650mm.
The maximum speed should be decreased by 15% for every 100mm of increased stroke.
** The load condition is based on 10,000km operation.
*** If used on the vertical axis or in a special condition, please contact HIWIN.

Model Number for KA170-FL

KA170	-20	P	-1250	A	FL	U	S1	M401
Model	Lead	Precision Grade	Effective Stroke	Slider Type	Motor Flange	Cover	Limit Switch	Motor
	10 mm 20 mm	C: Normal P: Precision		A: Standard	FL: Left	U: Without Cover None : Standard Cover	S1: OMRON SX671 S2: OMRON SX674 S3: Panasonic GX-F12A S4: Panasonic GX-F12A-P None: No Limit Switch	M40□ K40□ Motor specification: ref. catalof P.167 M:customer specified None:Without Motor

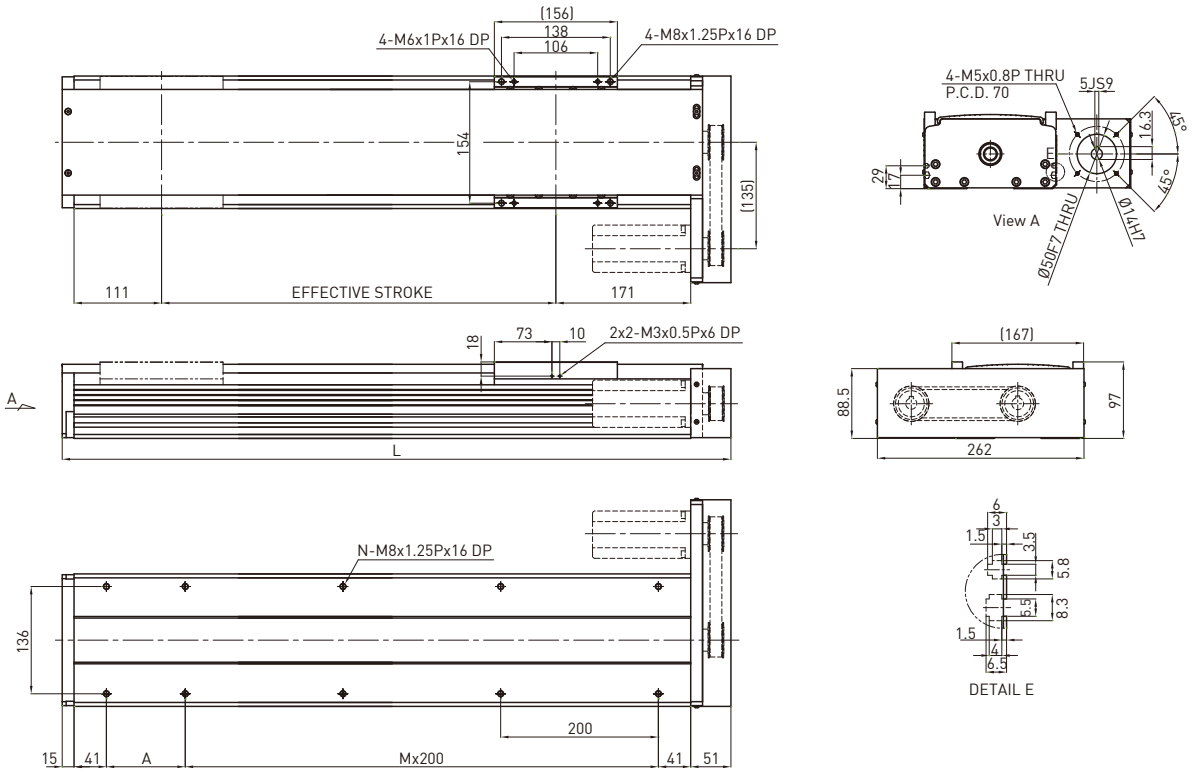

Effective stroke (mm)	L	A	M	N	Weight (kg)
150	498	150	1	6	15.01
200	548	200	1	6	15.92
250	598	50	2	8	16.82
300	648	100	2	8	17.73
350	698	150	2	8	18.63
400	748	200	2	8	19.54
450	798	50	3	10	20.45
500	848	100	3	10	21.35
550	898	150	3	10	22.26
600	948	200	3	10	23.17
650	998	50	4	12	24.07
700	1048	100	4	12	24.98
750	1098	150	4	12	25.89
800	1148	200	4	12	26.79
850	1198	50	5	14	27.71
900	1248	100	5	14	28.61
950	1298	150	5	14	29.51
1000	1348	200	5	14	30.42
1050	1398	50	6	16	31.33
1100	1448	100	6	16	32.23
1150	1498	150	6	16	33.14
1200	1548	200	6	16	34.04
1250	1598	50	7	18	34.94

AC motor output		W	400	
Drive			Ballscrew C7(normal)	
Lead		mm	10	20
Rated RPM		RPM	3000	3000
Max linear speed*		mm/sec	500	1000
Rated thrust		N	560	280
Repeatability		mm	±0.02	
Effective stroke		mm	150~1250	
Max load (H)		kg	125	75
Rated dynamic load**	Fyd	N	50	50
	Fzd	N	1250	750
	Mxd	N-m	100	110
	Myd	N-m	85	90
	Mzd	N-m	85	90
Permitted load condition***	$\frac{Fy}{Fyd}+\frac{Fz}{Fzd}+\frac{Mx}{Mxd}+\frac{My}{Myd}+\frac{Mz}{Mzd}\leq 1$ Fy, Fz, Mx, My, Mz are working loads			

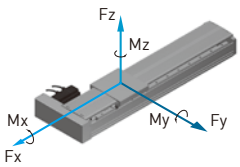

* Vibration might occur when the effective stroke is longer than 650mm.
The maximum speed should be decreased by 15% for every 100mm of increased stroke.
** The load condition is based on 10,000km operation.
*** If used on the vertical axis or in a special condition, please contact HIWIN.

Model Number for KA170-FR

KA170	-20	P	-1250	A	FR	U	S1	M401
Model	Lead	Precision Grade	Effective Stroke	Slider Type	Motor Flange	Cover	Limit Switch	Motor
	10 mm 20 mm	C: Normal P: Precision		A: Standard	FR: Right	U: Without Cover None : Standard Cover	S1: OMRON SX671 S2: OMRON SX674 S3: Panasonic GX-F12A S4: Panasonic GX-F12A-P None: No Limit Switch	M40□ K40□ Motor specification: ref. catalof P.167 M:customer specified None:Without Motor

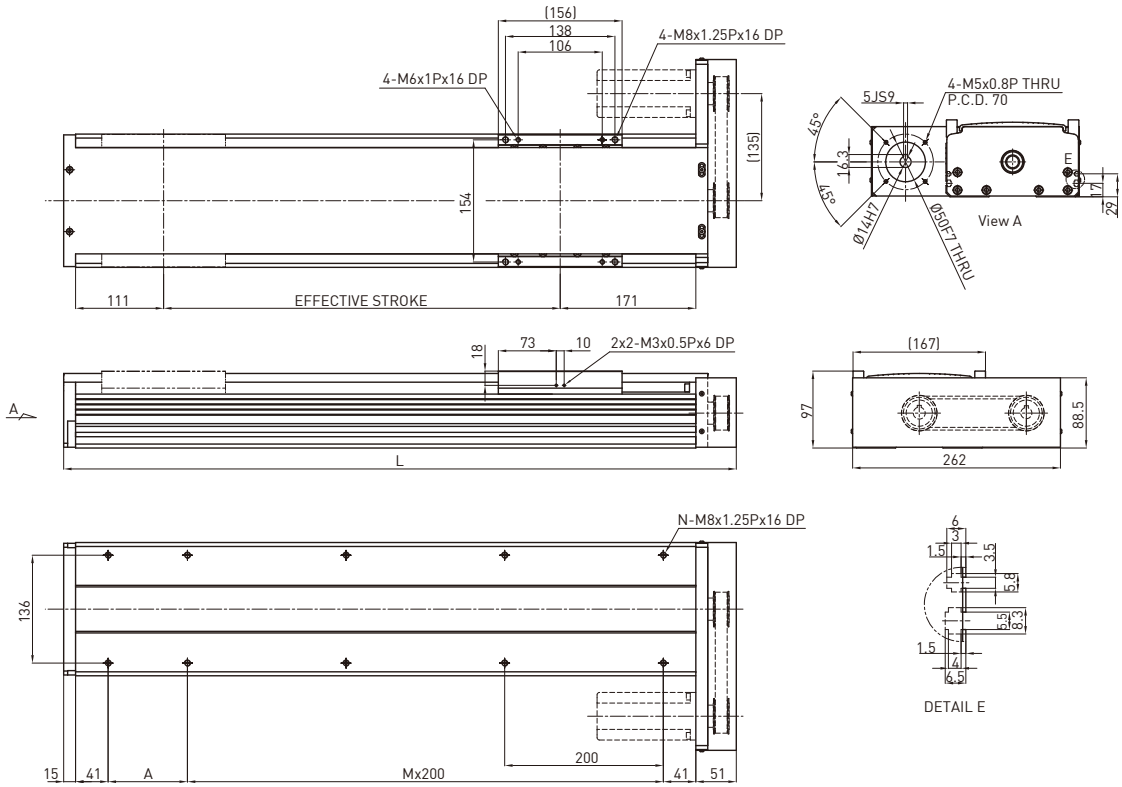

Effective stroke (mm)	L	A	M	N	Weight (kg)
150	498	150	1	6	15.01
200	548	200	1	6	15.92
250	598	50	2	8	16.82
300	648	100	2	8	17.73
350	698	150	2	8	18.63
400	748	200	2	8	19.54
450	798	50	3	10	20.45
500	848	100	3	10	21.35
550	898	150	3	10	22.26
600	948	200	3	10	23.17
650	998	50	4	12	24.07
700	1048	100	4	12	24.98
750	1098	150	4	12	25.89
800	1148	200	4	12	26.79
850	1198	50	5	14	27.71
900	1248	100	5	14	28.61
950	1298	150	5	14	29.51
1000	1348	200	5	14	30.42
1050	1398	50	6	16	31.33
1100	1448	100	6	16	32.23
1150	1498	150	6	16	33.14
1200	1548	200	6	16	34.04
1250	1598	50	7	18	34.94

AC motor output		W	400	
Drive			Ballscrew C7(normal)	
Lead		mm	10	20
Rated RPM		RPM	3000	3000
Max linear speed*		mm/sec	500	1000
Rated thrust		N	560	280
Repeatability		mm	±0.02	
Effective stroke		mm	150~1250	
Max load (H)		kg	125	75
Rated dynamic load**	Fyd	N	50	50
	Fzd	N	1250	750
	Mxd	N-m	100	110
	Myd	N-m	85	90
	Mzd	N-m	85	90
Permitted load condition***	$\frac{Fy}{Fyd}+\frac{Fz}{Fzd}+\frac{Mx}{Mxd}+\frac{My}{Myd}+\frac{Mz}{Mzd}\leq 1$ Fy, Fz, Mx, My, Mz are working loads			

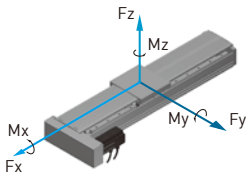

* Vibration might occur when the effective stroke is longer than 650mm.
The maximum speed should be decreased by 15% for every 100mm of increased stroke.
** The load condition is based on 10,000km operation.
*** If used on the vertical axis or in a special condition, please contact HIWIN.

Model Number for KA170B-FL

KA170	B	-120	C	-3000	A	FL	U	S1	M401
Model	Timing Belt	Pulley Perimeter	Precision Grade	Effective Stroke	Slider Type	Motor Flange	Cover	Limit Switch	Motor
			C: Normal		A: Standard	FL: Left	U: Without Cover None : Standard Cover	S1: OMRON SX671 S2: OMRON SX674 S3: Panasonic GX-F12A S4: Panasonic GX-F12A-P None: No Limit Switch	M40□ K40□ Motor specification: ref. catalof P.167 M:customer specified None:Without Motor

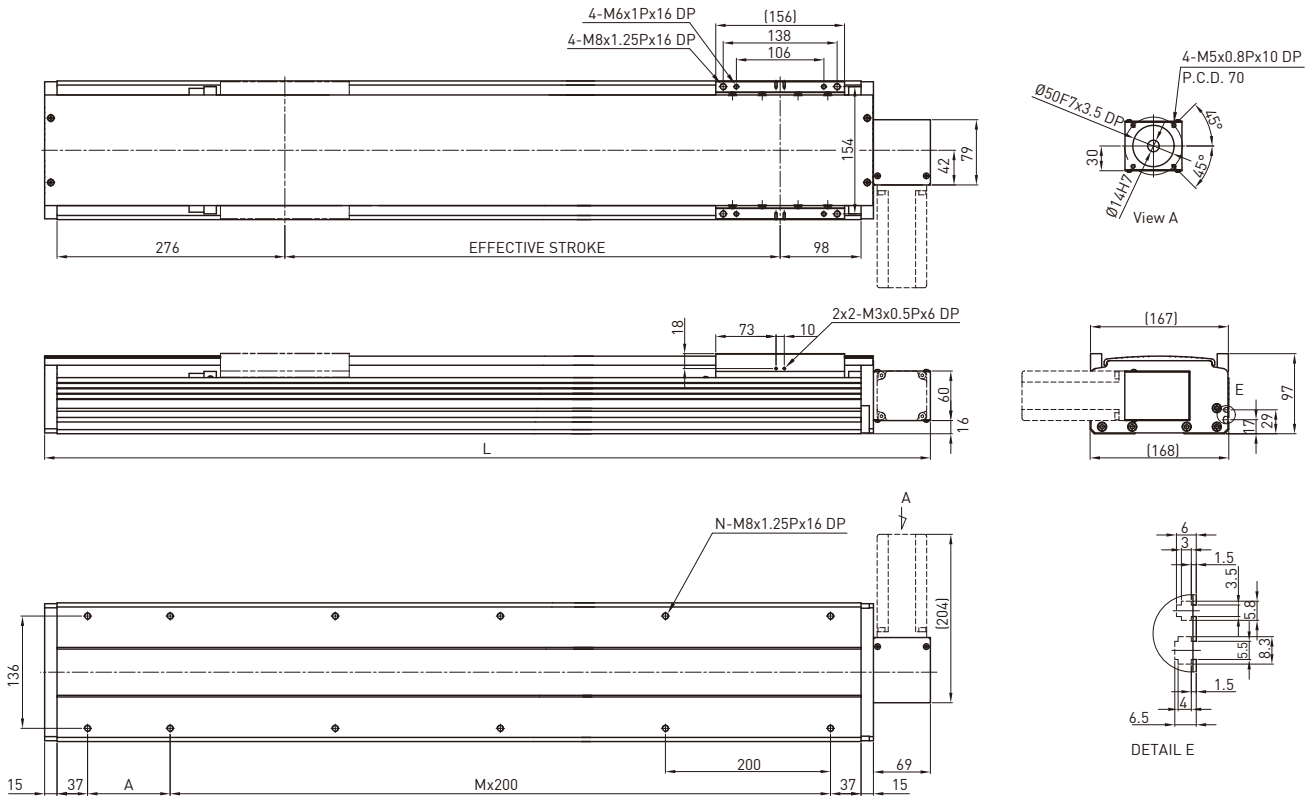

Effective stroke (mm)	L	A	M	N	Weight (kg)
200	673	100	2	8	14.74
400	873	100	3	10	17.88
600	1073	100	4	12	21.13
800	1273	100	5	14	24.37
1000	1473	100	6	16	27.52
1200	1673	100	7	18	30.77
1400	1873	100	8	20	34.01
1600	2073	100	9	22	37.07
1800	2273	100	10	24	40.3
2000	2473	100	11	26	43.54
2200	2673	100	12	28	46.68
2400	2873	100	13	30	49.92
2600	3073	100	14	32	53.07
2800	3273	100	15	34	56.2
3000	3473	100	16	36	59.44

AC motor output		W	400
Drive			Timing Belt
Pulley Perimeter		mm	120
Pulley RPM		RPM	900
Max linear speed		mm/sec	1800
Rated thrust		N	133
Repeatability		mm	±0.1
Effective stroke		mm	200~3000
Max load (H)		kg	30
Rated dynamic load*	Fyd	N	50
	Fzd	N	300
	Mxd	N-m	115
	Myd	N-m	96
	Mzd	N-m	96
Permitted load condition**	$\frac{Fy}{Fyd}+\frac{Fz}{Fzd}+\frac{Mx}{Mxd}+\frac{My}{Myd}+\frac{Mz}{Mzd}\leq 1$ Fy, Fz, Mx, My, Mz are working loads		

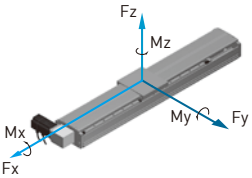

*The load condition is based on 10,000km operation.
**For horizontal applications only. If used in a special condition, please contact HIWIN.

Model Number for KA170B-FR

KA170	B	-120	C	-3000	A	FR	U	S1	M401
Model	Timing Belt	Pulley Perimeter	Precision Grade	Effective Stroke	Slider Type	Motor Flange	Cover	Limit Switch	Motor
			C: Normal		A: Standard	FR: Right	U: Without Cover None : Standard Cover	S1: OMRON SX671 S2: OMRON SX674 S3: Panasonic GX-F12A S4: Panasonic GX-F12A-P None: No Limit Switch	M40□ K40□ Motor specification: ref. catalof P.167 M:customer specified None:Without Motor

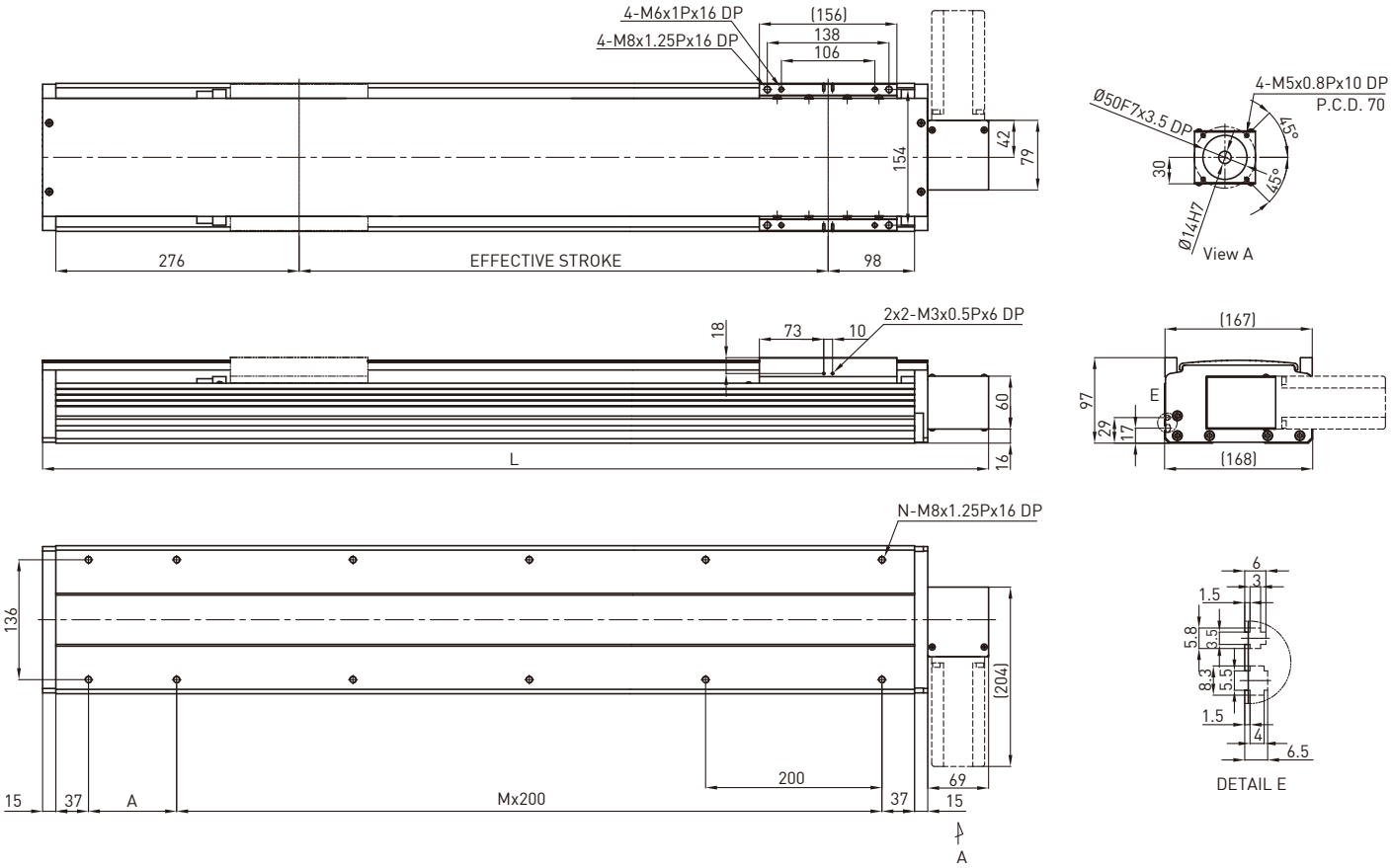

Effective stroke (mm)	L	A	M	N	Weight (kg)
200	673	100	2	8	14.74
400	873	100	3	10	17.88
600	1073	100	4	12	21.13
800	1273	100	5	14	24.37
1000	1473	100	6	16	27.52
1200	1673	100	7	18	30.77
1400	1873	100	8	20	34.01
1600	2073	100	9	22	37.07
1800	2273	100	10	24	40.3
2000	2473	100	11	26	43.54
2200	2673	100	12	28	46.68
2400	2873	100	13	30	49.92
2600	3073	100	14	32	53.07
2800	3273	100	15	34	56.2
3000	3473	100	16	36	59.44

AC motor output		W	400
Drive			Timing Belt
Pulley Perimeter		mm	120
Pulley RPM		RPM	900
Max linear speed		mm/sec	1800
Rated thrust		N	133
Repeatability		mm	±0.1
Effective stroke		mm	200~3000
Max load (H)		kg	30
Rated dynamic load*	Fyd	N	50
	Fzd	N	300
	Mxd	N-m	115
	Myd	N-m	96
	Mzd	N-m	96
Permitted load condition**	$\frac{Fy}{Fyd}+\frac{Fz}{Fzd}+\frac{Mx}{Mxd}+\frac{My}{Myd}+\frac{Mz}{Mzd}\leq 1$ Fy, Fz, Mx, My, Mz are working loads		

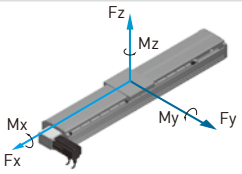

*The load condition is based on 10,000km operation.
**For horizontal applications only. If used in a special condition, please contact HIWIN.

Model Number for KA200

KA200	-25	P	-1250	A	F0	U	S1	M751
Model	Lead	Precision Grade	Effective Stroke	Slider Type	Motor Flange	Cover	Limit Switch	Motor
	10mm 25mm	C: Normal P: Precision		A: Standard	F0 : Direct	U: Without Cover None : Standard Cover	S1: OMRON SX671 S2: OMRON SX674 S3: Panasonic GX-F12A S4: Panasonic GX-F12A-P None: No Limit Switch	M75□ K75□ Motor specification: ref. catalof P.167 M:customer specified None:Without Motor

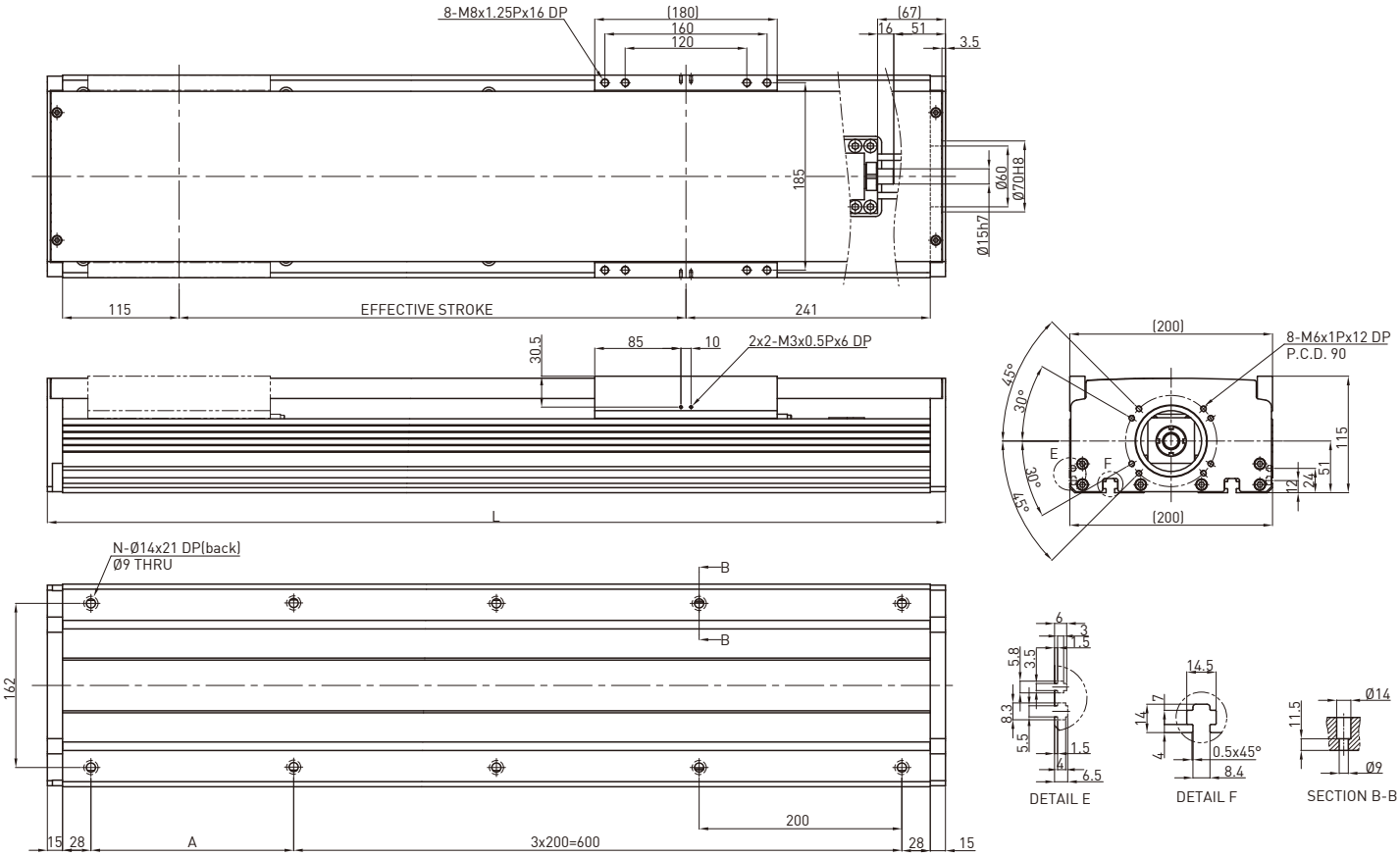

Effective stroke (mm)	L	A	M	N	Weight (kg)
150	536	50	2	8	17.66
200	586	100	2	8	18.99
250	636	150	2	8	20.32
300	686	200	2	8	21.65
350	736	50	3	10	22.98
400	786	100	3	10	24.31
450	836	150	3	10	25.64
500	886	200	3	10	26.97
550	936	50	4	12	28.3
600	986	100	4	12	29.63
650	1036	150	4	12	30.96
700	1086	200	4	12	32.29
750	1136	50	5	14	33.62
800	1186	100	5	14	34.95
850	1236	150	5	14	36.28
900	1286	200	5	14	37.61
950	1336	50	6	16	38.94
1000	1386	100	6	16	40.27
1050	1436	150	6	16	41.61
1100	1486	200	6	16	42.93
1150	1536	50	7	18	44.26
1200	1586	100	7	18	45.59
1250	1636	150	7	18	46.92

AC motor output		W	750	
Drive			Ballscrew C7(normal)	
Lead		mm	10	25
Rated RPM		RPM	3000	3000
Max linear speed*		mm/sec	500	1250
Rated thrust		N	1050	420
Repeatability		mm	±0.02	
Effective stroke		mm	150~1250	
Max load (H)		kg	150	85
Rated dynamic load**	Fyd	N	50	50
	Fzd	N	1500	850
	Mxd	N-m	180	185
	Myd	N-m	145	155
	Mzd	N-m	145	155
Permitted load condition***	$\frac{Fy}{Fyd}+\frac{Fz}{Fzd}+\frac{Mx}{Mxd}+\frac{My}{Myd}+\frac{Mz}{Mzd}\leq 1$ Fy, Fz, Mx, My, Mz are working loads			

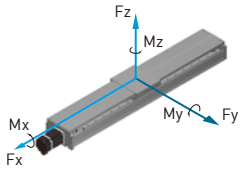

* Vibration might occur when the effective stroke is longer than 800mm.
The maximum speed should be decreased by 15% for every 100mm of increased stroke.
**The load condition is based on 10,000km operation.
***If used in a special condition, please contact HIWIN.

Model Number for KA200-FD

KA200	-25	P	-1250	A	FD	U	S1	M751
Model	Lead	Precision Grade	Effective Stroke	Slider Type	Motor Flange	Cover	Limit Switch	Motor
	10mm 25mm	C: Normal P: Precision		A: Standard	FD: Bottom	U: Without Cover None : Standard Cover	S1: OMRON SX671 S2: OMRON SX674 S3: Panasonic GX-F12A S4: Panasonic GX-F12A-P None: No Limit Switch	M75□ K75□ Motor specification: ref. catalof P.167 M:customer specified None:Without Motor

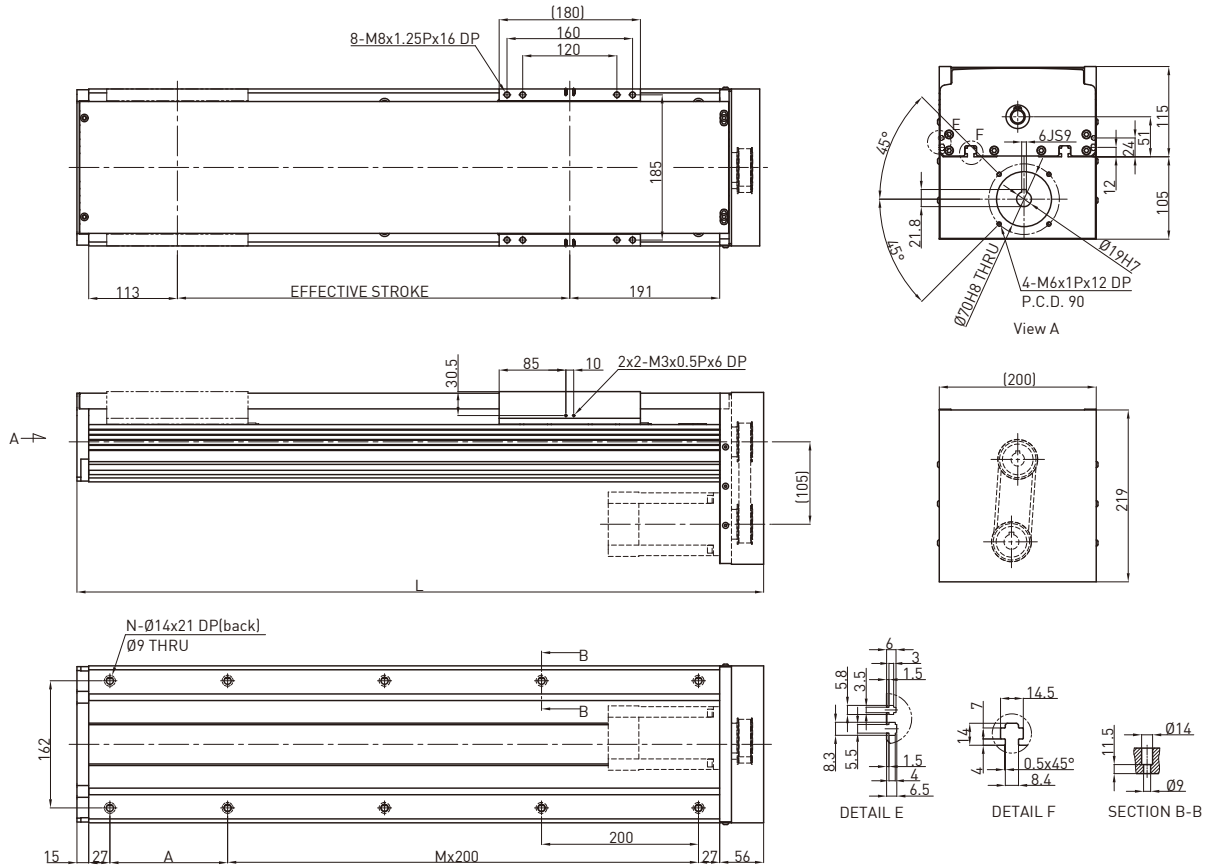

Effective stroke (mm)	L	A	M	N	Weight (kg)
150	525	200	1	6	18.46
200	575	50	2	8	19.79
250	625	100	2	8	21.12
300	675	150	2	8	22.45
350	725	200	2	8	23.78
400	775	50	3	10	25.11
450	825	100	3	10	26.44
500	875	150	3	10	27.77
550	925	200	3	10	29.1
600	975	50	4	12	30.43
650	1025	100	4	12	31.76
700	1075	150	4	12	33.09
750	1125	200	4	12	34.42
800	1175	50	5	14	35.75
850	1225	100	5	14	37.08
900	1275	150	5	14	38.41
950	1325	200	5	14	39.74
1000	1375	50	6	16	41.07
1050	1425	100	6	16	42.41
1100	1475	150	6	16	43.73
1150	1525	200	6	16	45.06
1200	1575	50	7	18	46.39
1250	1625	100	7	18	47.72

AC motor output		W	750	
Drive			Ballscrew C7(normal)	
Lead		mm	10	25
Rated RPM		RPM	3000	3000
Max linear speed*		mm/sec	500	1250
Rated thrust		N	1050	420
Repeatability		mm	±0.02	
Effective stroke		mm	150~1250	
Max load (H)		kg	150	85
Rated dynamic load**	Fyd	N	50	50
	Fzd	N	1500	850
	Mxd	N-m	180	185
	Myd	N-m	145	155
	Mzd	N-m	145	155

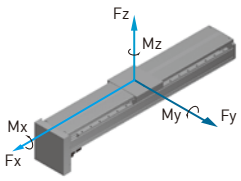

Permitted load condition* :

$$\frac{Fy}{Fyd}+\frac{Fz}{Fzd}+\frac{Mx}{Mxd}+\frac{My}{Myd}+\frac{Mz}{Mzd}\leq 1$$

Fy, Fz, Mx, My, Mz are working loads

* Vibration might occur when the effective stroke is longer than 800mm.
The maximum speed should be decreased by 15% for every 100mm of increased stroke.
**The load condition is based on 10,000km operation.
***If used in a special condition, please contact HIWIN.

Model Number for KA200-FI

KA200	-25	P	-1250	A	FI	U	S1	M751
Model	Lead	Precision Grade	Effective Stroke	Slider Type	Motor Flange	Cover	Limit Switch	Motor
	10mm 25mm	C: Normal P: Precision		A: Standard	FI: Internal	U: Without Cover None : Standard Cover	S1: OMRON SX671 S2: OMRON SX674 S3: Panasonic GX-F12A S4: Panasonic GX-F12A-P None: No Limit Switch	M75□ K75□ Motor specification: ref. catalof P.167 M:customer specified None:Without Motor

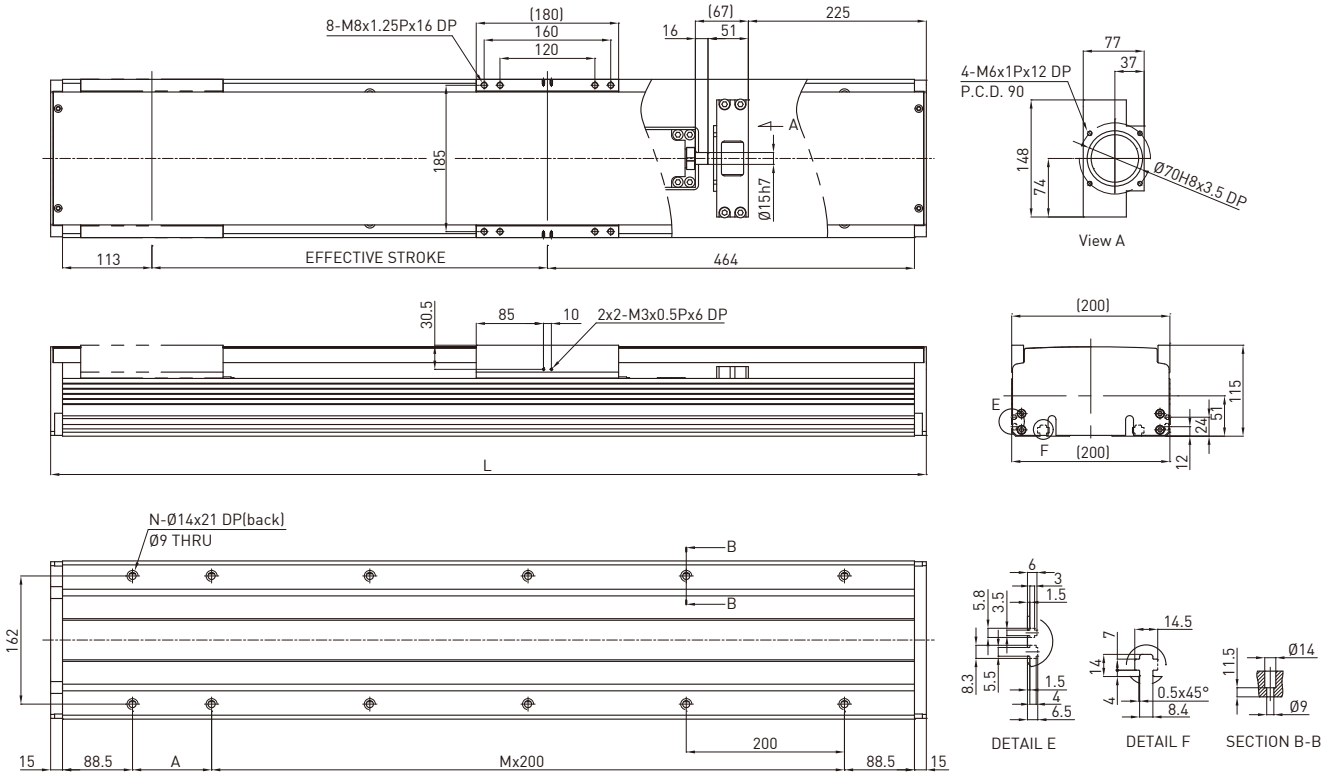

Effective stroke (mm)	L	A	M	N	Weight (kg)
150	757	150	2	8	19.83
200	807	200	2	8	21.32
250	857	50	3	10	22.82
300	907	100	3	10	24.31
350	957	150	3	10	25.81
400	1007	200	3	10	27.3
450	1057	50	4	12	28.79
500	1107	100	4	12	30.29
550	1157	150	4	12	31.78
600	1207	200	4	12	33.27
650	1257	50	5	14	34.77
700	1307	100	5	14	36.26
750	1357	150	5	14	37.76
800	1407	200	5	14	39.25
850	1457	50	6	16	40.74
900	1507	100	6	16	42.24
950	1557	150	6	16	43.73
1000	1607	200	6	16	45.22
1050	1657	50	7	18	46.73
1100	1707	100	7	18	48.21
1150	1757	150	7	18	49.7
1200	1807	200	7	18	51.2
1250	1857	50	8	19	52.69

AC motor output		W	750	
Drive			Ballscrew C7(normal)	
Lead		mm	10	25
Rated RPM		RPM	3000	3000
Max linear speed*		mm/sec	500	1250
Rated thrust		N	1050	420
Repeatability		mm	±0.02	
Effective stroke		mm	150~1250	
Max load (H)		kg	150	85
Rated dynamic load**	Fyd	N	50	50
	Fzd	N	1500	850
	Mxd	N-m	180	185
	Myd	N-m	145	155
	Mzd	N-m	145	155
Permitted load condition***	$\frac{Fy}{Fyd}+\frac{Fz}{Fzd}+\frac{Mx}{Mxd}+\frac{My}{Myd}+\frac{Mz}{Mzd}\leq 1$ Fy, Fz, Mx, My, Mz are working loads			

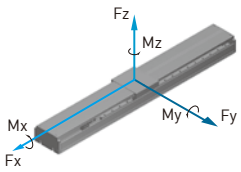

* Vibration might occur when the effective stroke is longer than 800mm.
The maximum speed should be decreased by 15% for every 100mm of increased stroke.
**The load condition is based on 10,000km operation.
***If used in a special condition, please contact HIWIN.

Model Number for KA200-FL

KA200	-25	P	-1250	A	FL	U	S1	M751
Model	Lead	Precision Grade	Effective Stroke	Slider Type	Motor Flange	Cover	Limit Switch	Motor
	10mm 25mm	C: Normal P: Precision		A: Standard	FL: Left	U: Without Cover None : Standard Cover	S1: OMRON SX671 S2: OMRON SX674 S3: Panasonic GX-F12A S4: Panasonic GX-F12A-P None: No Limit Switch	M75□ K75□ Motor specification: ref. catalof P.167 M:customer specified None:Without Motor

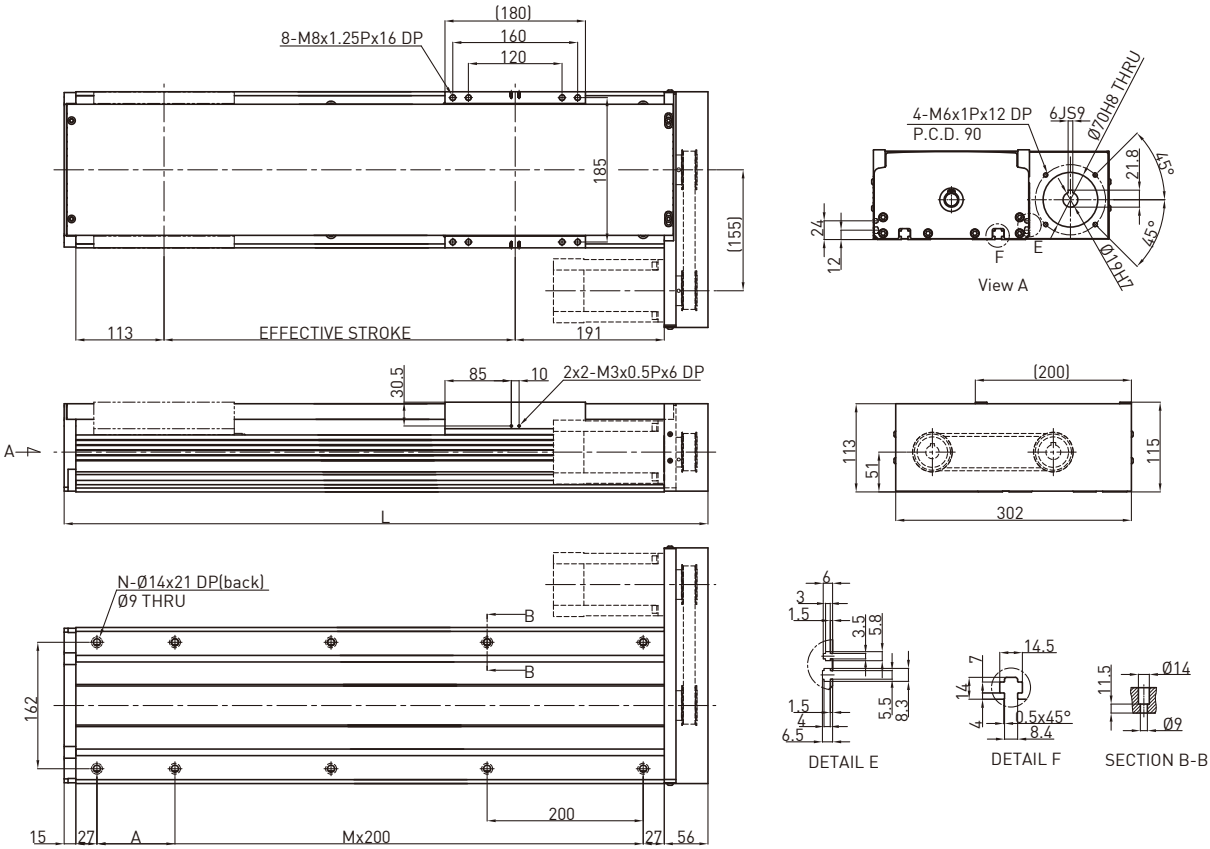

Effective stroke (mm)	L	A	M	N	Weight (kg)
150	525	200	1	6	18.46
200	575	50	2	8	19.79
250	625	100	2	8	21.12
300	675	150	2	8	22.45
350	725	200	2	8	23.78
400	775	50	3	10	25.11
450	825	100	3	10	26.44
500	875	150	3	10	27.77
550	925	200	3	10	29.1
600	975	50	4	12	30.43
650	1025	100	4	12	31.76
700	1075	150	4	12	33.09
750	1125	200	4	12	34.42
800	1175	50	5	14	35.75
850	1225	100	5	14	37.08
900	1275	150	5	14	38.41
950	1325	200	5	14	39.74
1000	1375	50	6	16	41.07
1050	1425	100	6	16	42.41
1100	1475	150	6	16	43.73
1150	1525	200	6	16	45.06
1200	1575	50	7	18	46.39
1250	1625	100	7	18	47.72

AC motor output		W	750	
Drive			Ballscrew C7(normal)	
Lead		mm	10	25
Rated RPM		RPM	3000	3000
Max linear speed*		mm/sec	500	1250
Rated thrust		N	1050	420
Repeatability		mm	±0.02	
Effective stroke		mm	150~1250	
Max load (H)		kg	150	85
Rated dynamic load**	Fyd	N	50	50
	Fzd	N	1500	850
	Mxd	N-m	180	185
	Myd	N-m	145	155
	Mzd	N-m	145	155
Permitted load condition***	$\frac{Fy}{Fyd}+\frac{Fz}{Fzd}+\frac{Mx}{Mxd}+\frac{My}{Myd}+\frac{Mz}{Mzd}\leq 1$ Fy, Fz, Mx, My, Mz are working loads			

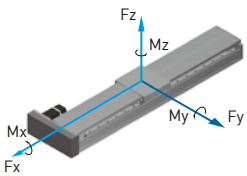

* Vibration might occur when the effective stroke is longer than 800mm.
The maximum speed should be decreased by 15% for every 100mm of increased stroke.
**The load condition is based on 10,000km operation.
***If used in a special condition, please contact HIWIN.

Model Number for KA200-FR

KA200	-25	P	-1250	A	FR	U	S1	M751
Model	Lead	Precision Grade	Effective Stroke	Slider Type	Motor Flange	Cover	Limit Switch	Motor
	10mm 25mm	C: Normal P: Precision		A: Standard	FR: Right	U: Without Cover None : Standard Cover	S1: OMRON SX671 S2: OMRON SX674 S3: Panasonic GX-F12A S4: Panasonic GX-F12A-P None: No Limit Switch	M75□ K75□ Motor specification: ref. catalof P.167 M:customer specified None:Without Motor

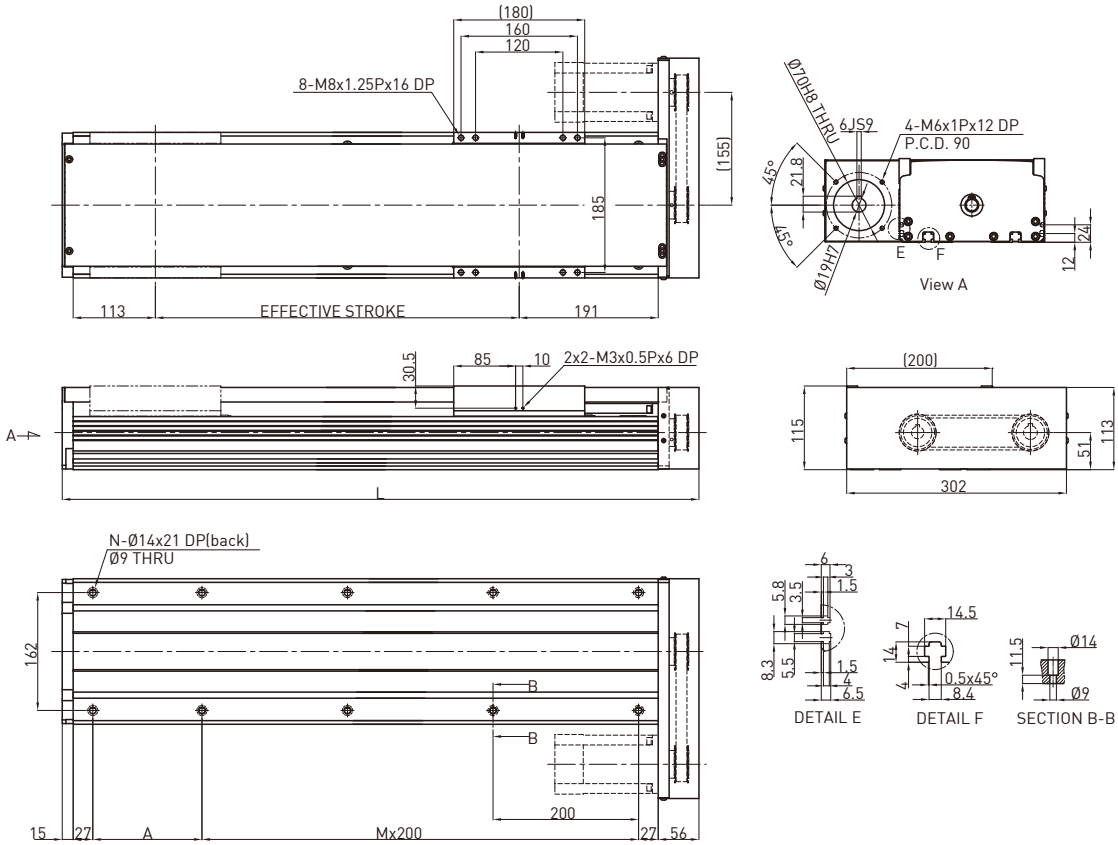

Effective stroke (mm)	L	A	M	N	Weight (kg)
150	525	200	1	6	18.46
200	575	50	2	8	19.79
250	625	100	2	8	21.12
300	675	150	2	8	22.45
350	725	200	2	8	23.78
400	775	50	3	10	25.11
450	825	100	3	10	26.44
500	875	150	3	10	27.77
550	925	200	3	10	29.1
600	975	50	4	12	30.43
650	1025	100	4	12	31.76
700	1075	150	4	12	33.09
750	1125	200	4	12	34.42
800	1175	50	5	14	35.75
850	1225	100	5	14	37.08
900	1275	150	5	14	38.41
950	1325	200	5	14	39.74
1000	1375	50	6	16	41.07
1050	1425	100	6	16	42.41
1100	1475	150	6	16	43.73
1150	1525	200	6	16	45.06
1200	1575	50	7	18	46.39
1250	1625	100	7	18	47.72

AC motor output		W	750	
Drive			Ballscrew C7(normal)	
Lead		mm	10	25
Rated RPM		RPM	3000	3000
Max linear speed*		mm/sec	500	1250
Rated thrust		N	1050	420
Repeatability		mm	±0.02	
Effective stroke		mm	150~1250	
Max load (H)		kg	150	85
Rated dynamic load**	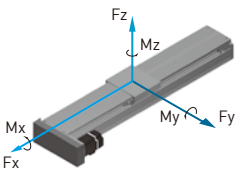	Fyd	N	50	50
		Fzd	N	1500	850
		Mxd	N-m	180	185
		Myd	N-m	145	155
		Mzd	N-m	145	155
Permitted load condition**	$\frac{Fy}{Fyd}+\frac{Fz}{Fzd}+\frac{Mx}{Mxd}+\frac{My}{Myd}+\frac{Mz}{Mzd}\leq 1$ Fy, Fz, Mx, My, Mz are working loads			

* Vibration might occur when the effective stroke is longer than 800mm.
The maximum speed should be decreased by 15% for every 100mm of increased stroke.
**The load condition is based on 10,000km operation.
***If used in a special condition, please contact HIWIN.

5.12 Motor Adaptor Flange List

Model	Flange Selection	Flange dimensions								
		a	b	c	d	e	f	g	h	i
KA100	F1	45	42	-	M3	7	30H8	28	-	-
KA136	F1	70	62	-	M4	10	50H8	46	-	-
	F2	46	62	-	M4	8	30H8	-	-	-
	F3	45	62	-	M3	8	30H8	-	-	-
	F4	90	80	-	M5	12	70H8	46	-	-
	F5	-	62	50	M4	8	36H8	46	-	-
	F6	-	62	47.14	M4	8	38.1H8	46	-	-
KA170	F1	90	80	-	M6	12	70H8	46	-	-
	F2	90	80	-	M5	12	70H8	46	-	-
	F3	-	82	70	M6	12	60H8	46	-	-
	F4	-	82	69.58	M6	12	73.06H8	46	-	-
KA200	F1	70	-	-	M5	12	70H8	60	73	92
	F2	90	-	-	M5	12	70H8	60	80	92

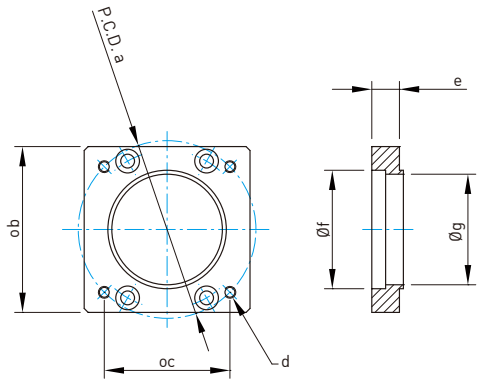

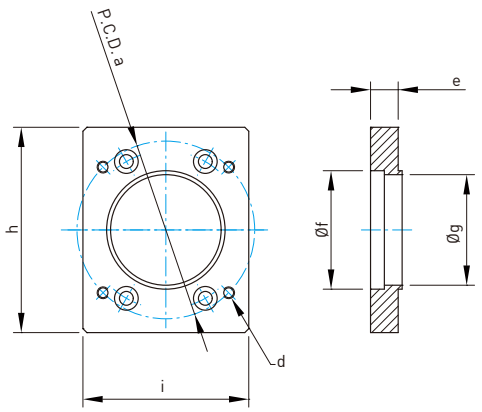

KA90

Motor Adaptor Flange F0

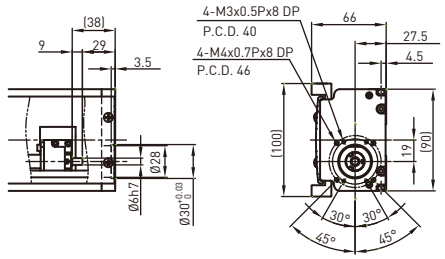

Motor Adaptor Flange F1

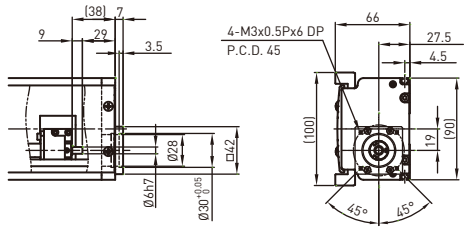

KA120

Motor Adaptor Flange F0

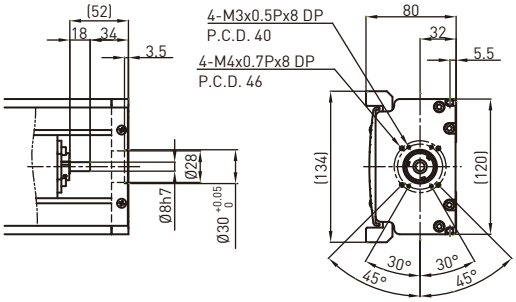

Motor Adaptor Flange F1

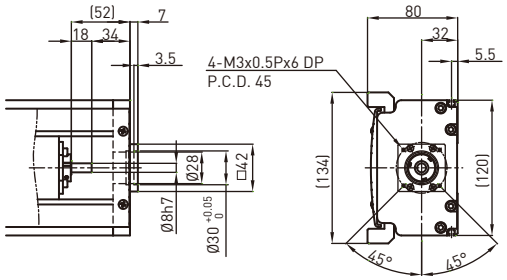

KA100

Motor Adaptor Flange F0

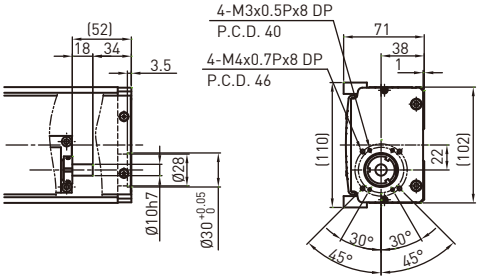

Motor Adaptor Flange F1

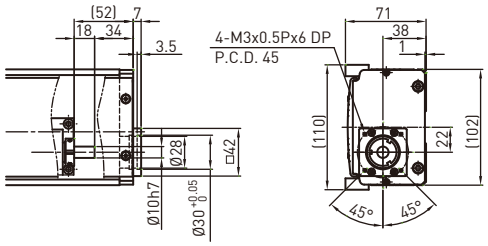

KA136

Motor Adaptor Flange F0

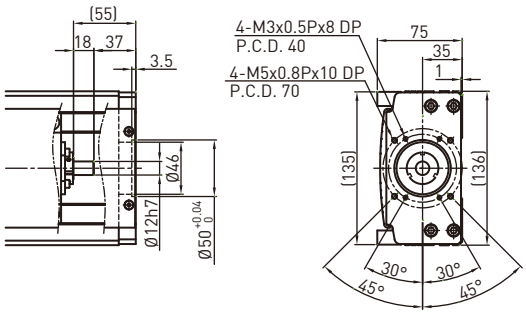

Motor Adaptor Flange F1

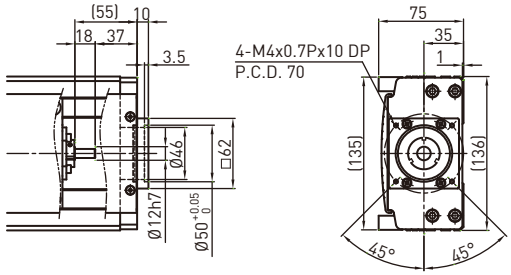

Motor Adaptor Flange F4

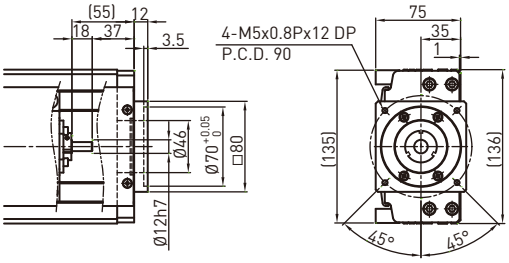

Motor Adaptor Flange F2

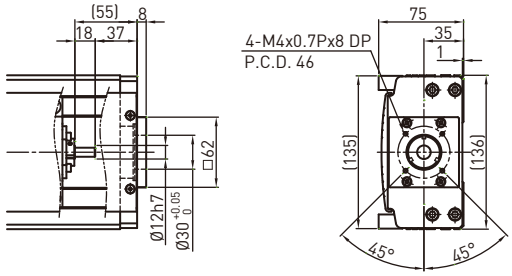

Motor Adaptor Flange F5

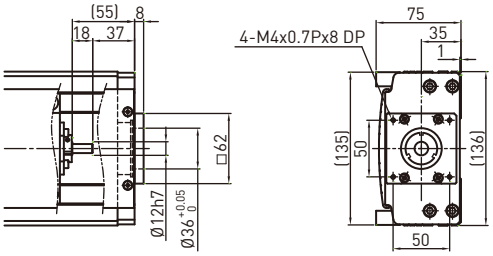

Motor Adaptor Flange F3

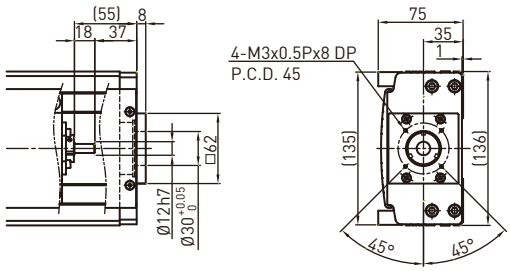

Motor Adaptor Flange F6

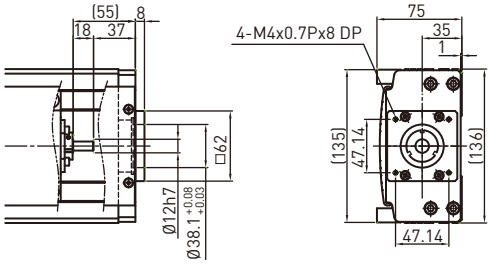

KA150

Motor Adaptor Flange F0

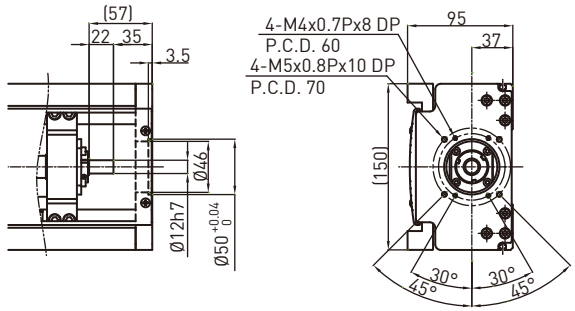

Motor Adaptor Flange F1

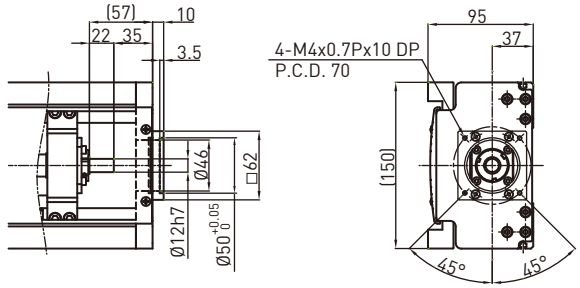

Motor Adaptor Flange F4

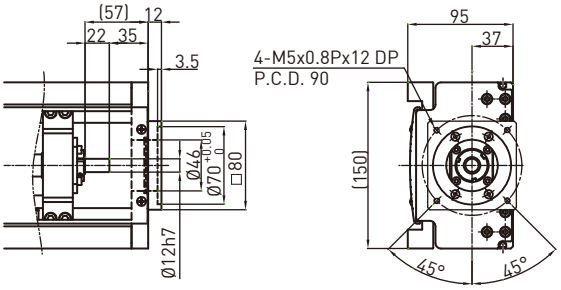

Motor Adaptor Flange F2

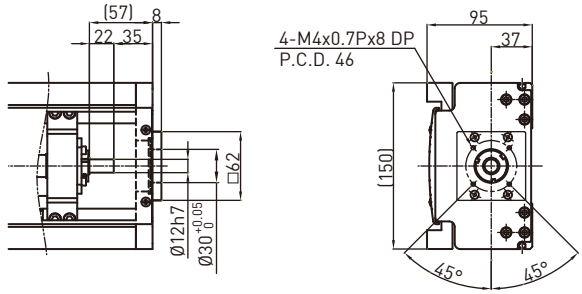

Motor Adaptor Flange F5

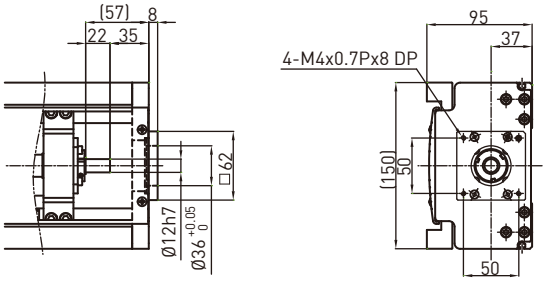

Motor Adaptor Flange F3

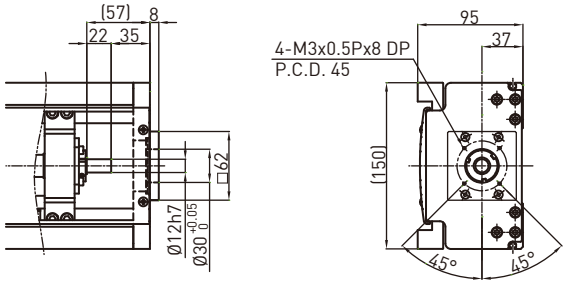

Motor Adaptor Flange F6

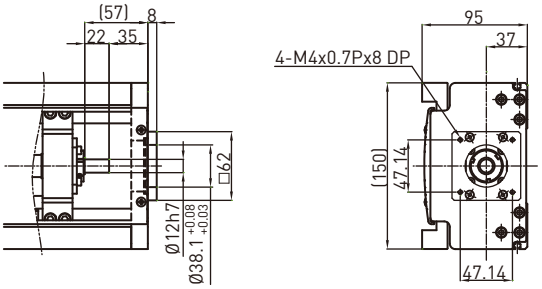

KA170

Motor Adaptor Flange F0

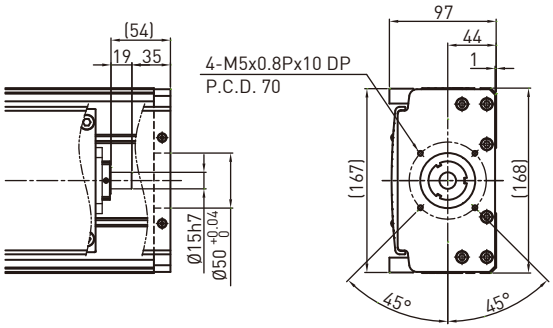

Motor Adaptor Flange F1

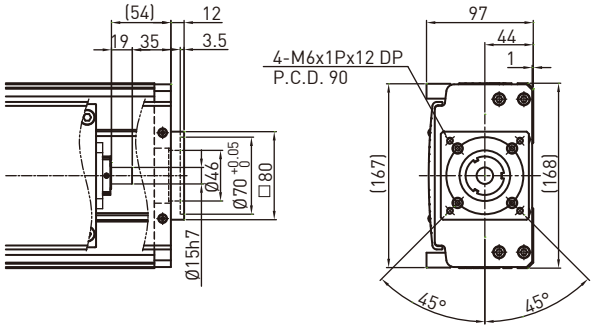

Motor Adaptor Flange F3

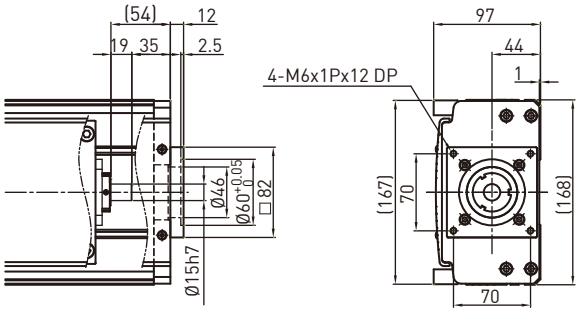

Motor Adaptor Flange F2

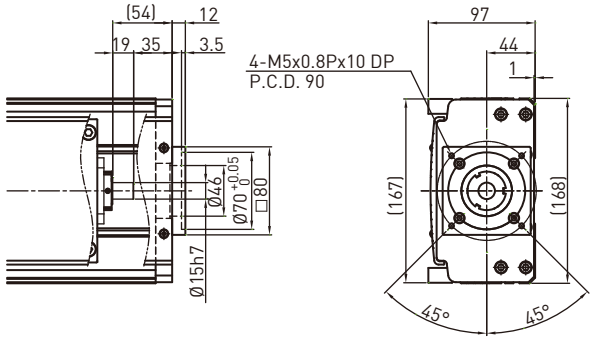

Motor Adaptor Flange F4

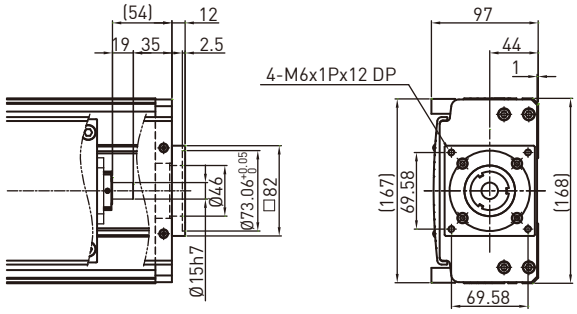

KA200

Motor Adaptor Flange F0

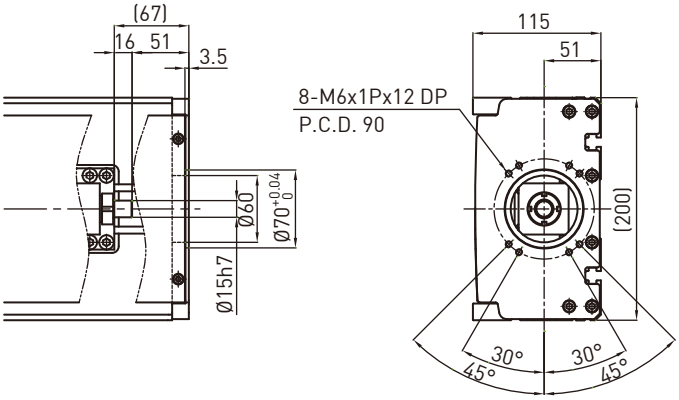

Motor Adaptor Flange F1

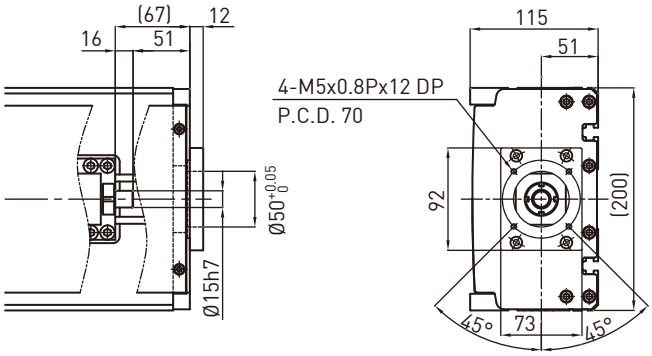

Motor Adaptor Flange F2

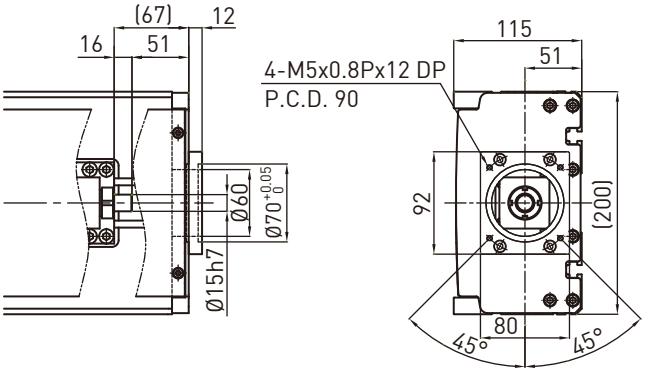

5.13 Motor Housing and Motor Adaptor Flange

HIWIN Mikrosystem Servo Motor

Motor Output	Motor	Flange Selection							Drive	Remarks
		KA90	KA100	KA120	KA136	KA150	KA170	KA200		
50W	FRLS052□□A4□	F1	F1	F1	F3	F3	-	-	D2T-0123-S-A□	220V
100W	FRLS102□□A4□	F1	F1	F1	F3	F3	-	-		220V
200W	FRLS202□□06□	-	-	-	F0	F0	F0	F1	D2T-0423-S-B□	220V
400W	FRLS402□□06□	-	-	-	F0	F0	F0	F1		220V
750W	FRMS752□□08□	-	-	-	-	-	F1	F0	D2T-1023-S-C□	220V

Mitsubishi Servo Motor

Motor Output	Motor	Flange Selection							Drive	Remarks
		KA90	KA100	KA120	KA136	KA150	KA170	KA200		
50W	HF-KP053	F0	F0	F0	F2	F2	-	-	MR-J3S-10A	220V
100W	HF-KP13	F0	F0	F0	F2	F2	-	-	MR-J3S-10A	220V
200W	HF-KP23	-	-	-	F0	F0	F0	F1	MR-J3S-20A	220V
400W	HF-KP43	-	-	-	F0	F0	F0	F1	MR-J3S-40A	220V
750W	HF-KP73	-	-	-	-	-	F1	F0	MR-J3S-70A	220V

Panasonic Servo Motor

Motor Output	Motor	Flange Selection							Drive	Remarks
		KA90	KA100	KA120	KA136	KA150	KA170	KA200		
50W	MSMD5AZP1	F1	F1	F1	F3	F3	-	-	MADDT1105	110V
50W	MSMD5AZP1	F1	F1	F1	F3	F3	-	-	MADDT1205	220V
100W	MSMD011P1	F1	F1	F1	F3	F3	-	-	MADDT1107	110V
100W	MSMD012P1	F1	F1	F1	F3	F3	-	-	MADDT1205	220V
200W	MSMD021P1	-	-	-	F1	F1	-	-	MADDT2110	110V
200W	MSMD022P1	-	-	-	F1	F1	-	-	MADDT1207	220V
400W	MSMD041P1	-	-	-	F1	F1	-	-	MADDT3120	110V
400W	MSMD042P1	-	-	-	F1	F1	-	-	MADDT2210	220V
750W	MSMD082S1	-	-	-	F4	F4	F2	F2	MADDT3520	220V

Yasukawa Servo Motor

Motor Output	Motor	Flange Selection							Drive	Remarks
		KA90	KA100	KA120	KA136	KA150	KA170	KA200		
50W	SGMAV-A5ADA61	F0	F0	F0	F2	F2	-	-	SGDV-R70A01A	with key
50W	SGMAV-A5ADA2C	F0	F0	F0	F2	F2	-	-	SGDV-R70A01A	no key
50W	SGMAV-A5ADA21	F0	F0	F0	F2	F2	-	-	SGDV-R70A01A	no key
100W	SGMAV-01ADA21	F0	F0	F0	F2	F2	-	-	SGDV-R90A01A	
200W	SGMAV-02ADA21	-	-	-	F0	F0	F0	F1	SGDV-1R6A01A	
400W	SGMAV-04ADA21	-	-	-	F0	F0	F0	F1	SGDV-2R8A01A	
750W	SGMAV-08ADA21	-	-	-	-	-	F1	F0	SGDV-5R5A01A	

Oriental Step Motor

Series	Model	Flange Selection							Drive	Remarks
		KA90	KA100	KA120	KA136	KA150	KA170	KA200		
CSK 2 phase	CSK243-AP	-	-	-	-	-	-	-		
	CSK244-AP	-	-	-	-	-	-	-		
	CSK245-AP	-	-	-	-	-	-	-		
	CSK264-AP	-	-	-	F6	F6	-	-		
	CSK266-AP	-	-	-	F6	F6	-	-		
	CSK268-AP	-	-	-	F6	F6	-	-		
	CSK296-AP	-	-	-	-	-	F4	-		
	CSK299-AP	-	-	-	-	-	F4	-		
	CSK2913-AP	-	-	-	-	-	F4	-		
CFKII 5 phase micro stepping	CFK543AP2	-	-	-	-	-	-	-		
	CFK544AP2	-	-	-	-	-	-	-		
	CFK545AP2	-	-	-	-	-	-	-		
	CFK564AP2	-	-	-	F5	F5	-	-		
	CFK566AP2	-	-	-	F5	F5	-	-		
	CFK569AP2	-	-	-	F5	F5	-	-		
	CFK566HAP2	-	-	-	F5	F5	-	-		
	CKF569HAP2	-	-	-	F5	F5	-	-		
	CFK596HAP2	-	-	-	-	-	F3	-		
	CFK599HAP2	-	-	-	-	-	F3	-		
	CFK5913HAP2	-	-	-	-	-	F3	-		
UMK 2 phase	UMK243A	-	-	-	-	-	-	-		
	UMK244A	-	-	-	-	-	-	-		
	UMK245A	-	-	-	-	-	-	-		
	UMK264A	-	-	-	F6	F6	-	-		
	UMK266A	-	-	-	F6	F6	-	-		
	UMK268A	-	-	-	F6	F6	-	-		
RK 5 phase	RK543AA	-	-	-	-	-	-	-		
	RK544AA	-	-	-	-	-	-	-		
	RK545AA	-	-	-	-	-	-	-		
	RK566AA	-	-	-	F5	F5	-	-		
	RK569AA	-	-	-	F5	F5	-	-		
	RK596AA	-	-	-	-	-	F3	-		
	RK599AA	-	-	-	-	-	F3	-		
	RK5913AA	-	-	-	-	-	F3	-		

Single-Axis Robot
6. KS Series

6.1 Features

◎ For use in clean room
◎ Stainless steel cover
◎ Already installed AC servo motor (optional)
◎ High repeatability ±0.02mm
◎ Dustproof
◎ Different strokes available

6.2 Applications

◎ FPD industry
◎ Semiconductor
◎ Medical applications
◎ FPD glass transfer
◎ Inspection & testing equipment

6.3 KS Series

Model Number for KS090

KS090	-10	P	-0600	A	F0	S1	M101
Model	Lead	Precision Grade	Effective Stroke	Slider Type	Motor Flange	Limit Switch	Motor
	5mm 10mm	P: Precision C: Normal		A: Standard	F0: Direct	S1: OMRON SX671 S2: OMRON SX674 S3: Panasonic GX-F12A S4: Panasonic GX-F12A-P None: No Limit Switch	M05□, K05□ M10□, K10□ Motor specification: ref. catalof P.167 M:customer specified None:Without Motor

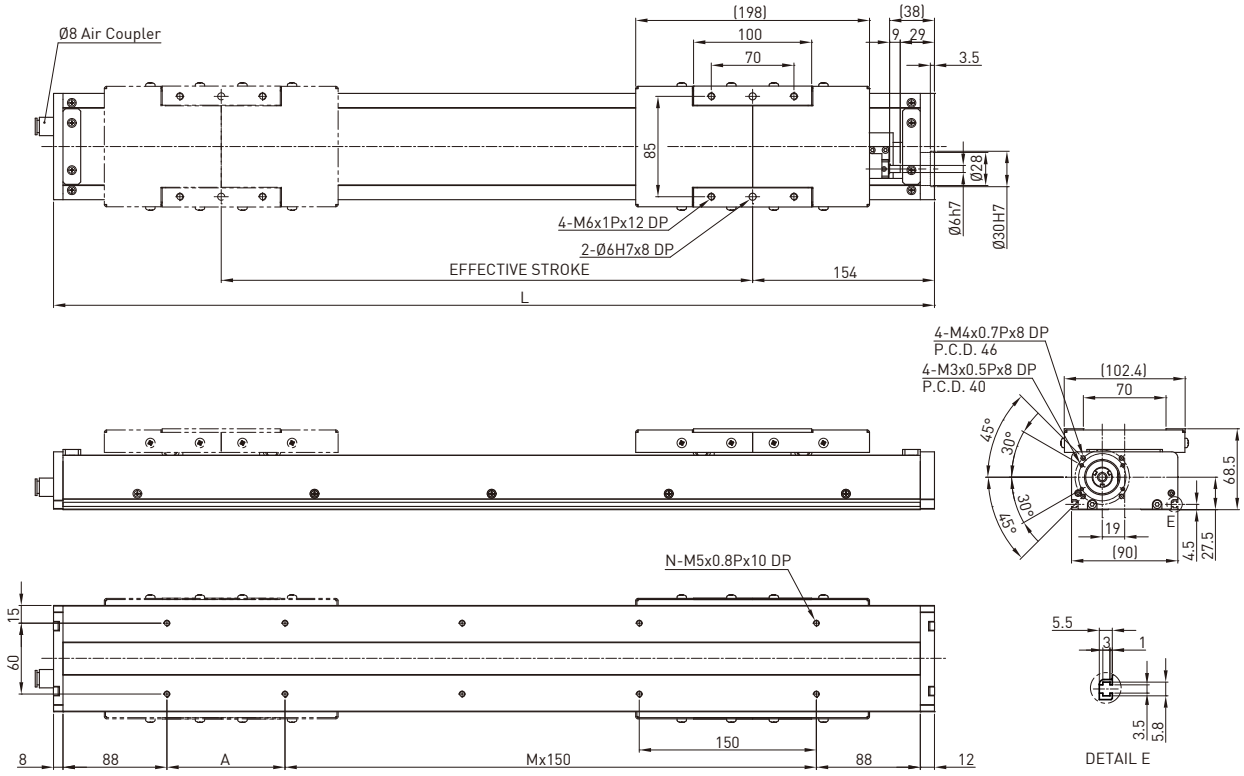

Effective stroke (mm)	L	A	M	N	Weight (kg)
50	346	150	0	4	3.38
100	396	50	1	6	3.78
150	446	100	1	6	4.18
200	496	150	1	6	4.58
250	546	50	2	8	4.98
300	596	100	2	8	5.38
350	646	150	2	8	5.78
400	696	50	3	10	6.18
450	746	100	3	10	6.58
500	796	150	3	10	7.19
550	846	50	4	12	7.38
600	896	100	4	12	7.78

AC motor output		W	100	
Drive			Ballscrew C7(normal)	
Lead		mm	5	10
Rated RPM		RPM	3000	3000
Max linear speed*		mm/sec	250	500
Rated thrust		N	280	140
Repeatability		mm	±0.02	
Effective stroke		mm	50~600	
Max load (H)		kg	24	12
Rated dynamic load**	Fyd	N	50	50
	Fzd	N	240	120
	Mxd	N-m	5	4.5
	Myd	N-m	2.3	2.1
	Mzd	N-m	2.3	2.1
Permitted load condition***	$\frac{Fy}{Fyd}+\frac{Fz}{Fzd}+\frac{Mx}{Mxd}+\frac{My}{Myd}+\frac{Mz}{Mzd}\leq 1$ Fy, Fz, Mx, My, Mz are working loads			

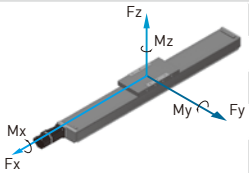

* Vibration might occur when the effective stroke is longer than 650mm.
The maximum speed should be decreased by 15% for every 100mm of increased stroke.
** The load condition is based on 10,000km operation.
*** If used on the vertical axis or in a special condition, please contact HIWIN.

Model Number for KS100-FI

KS100	-20	P	-800	A	FI	S2	M101
Model	Lead	Precision Grade	Effective Stroke	Slider Type	Motor Flange	Limit Switch	Motor
	10mm 20mm	P: Precision C: Normal		A: Standard	FI: Internal	S1: OMRON SX671 S2: OMRON SX674 S3: Panasonic GX-F12A S4: Panasonic GX-F12A-P None: No Limit Switch	M05□, K05□ M10□, K10□ Motor specification: ref. catalof P.167 M:customer specified None:Without Motor

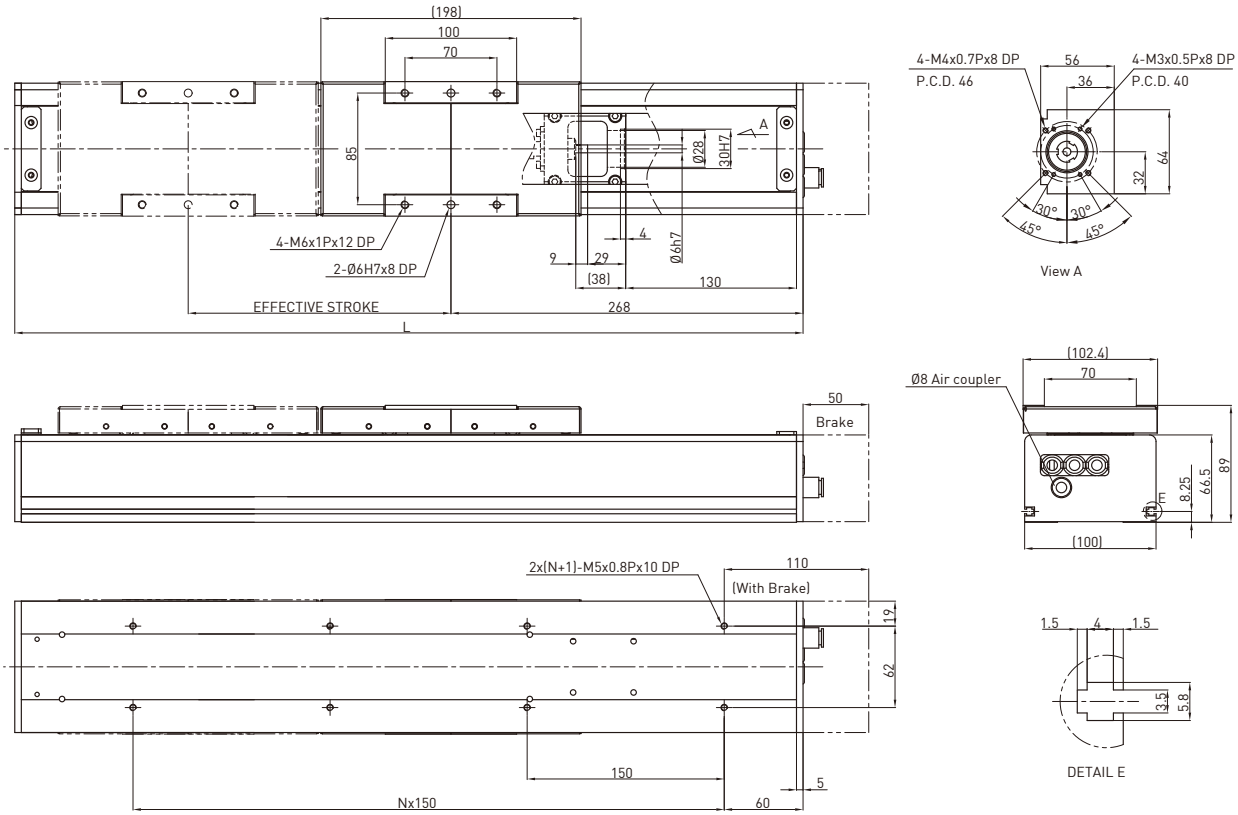

Effective stroke (mm)	L	N	Weight (kg)
200	600	3	9.1
300	700	4	9.8
400	800	4	10.5
500	900	5	11.2
600	1000	6	11.9
700	1100	6	12.6
800	1200	7	13.3

AC motor output	W	100		
Drive		Ballscrew C7(normal)		
Lead	mm	5	10	20
Rated RPM	RPM	3000	3000	3000
Max linear speed*	mm/sec	250	500	1000
Rated thrust	N	280	140	70
Repeatability	mm	±0.02		
Effective stroke	mm	200~800		
Max load (H)	kg	8	6	3.5
Rated dynamic load**	Fyd	N	20	20	20
	Fzd	N	80	60	35
	Mxd	N-m	1.1	1.2	1.1
	Myd	N-m	0.9	0.9	0.9
	Mzd	N-m	0.9	0.9	0.9
Permitted load condition***	$\frac{Fy}{Fyd}+\frac{Fz}{Fzd}+\frac{Mx}{Mxd}+\frac{My}{Myd}+\frac{Mz}{Mzd}\leq 1$ Fy, Fz, Mx, My, Mz are working loads			

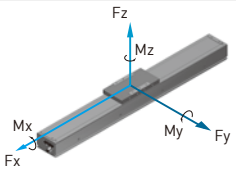

* Vibration might occur when the effective stroke is longer than 650mm.
The maximum speed should be decreased by 15% for every 100mm of increased stroke.
** The load condition is based on 10,000km operation.
*** If used on the vertical axis or in a special condition, please contact HIWIN.

Model Number for KS100-FL

KS100	-20	P	-800	A	FL	S2	M101
Model	Lead	Precision Grade	Effective Stroke	Slider Type	Motor Flange	Limit Switch	Motor
	10mm 20mm	P: Precision C: Normal		A: Standard	FL: Left	S1: OMRON SX671 S2: OMRON SX674 S3: Panasonic GX-F12A S4: Panasonic GX-F12A-P None: No Limit Switch	M05□, K05□ M10□, K10□ Motor specification: ref. catalof P.167 M:customer specified None:Without Motor

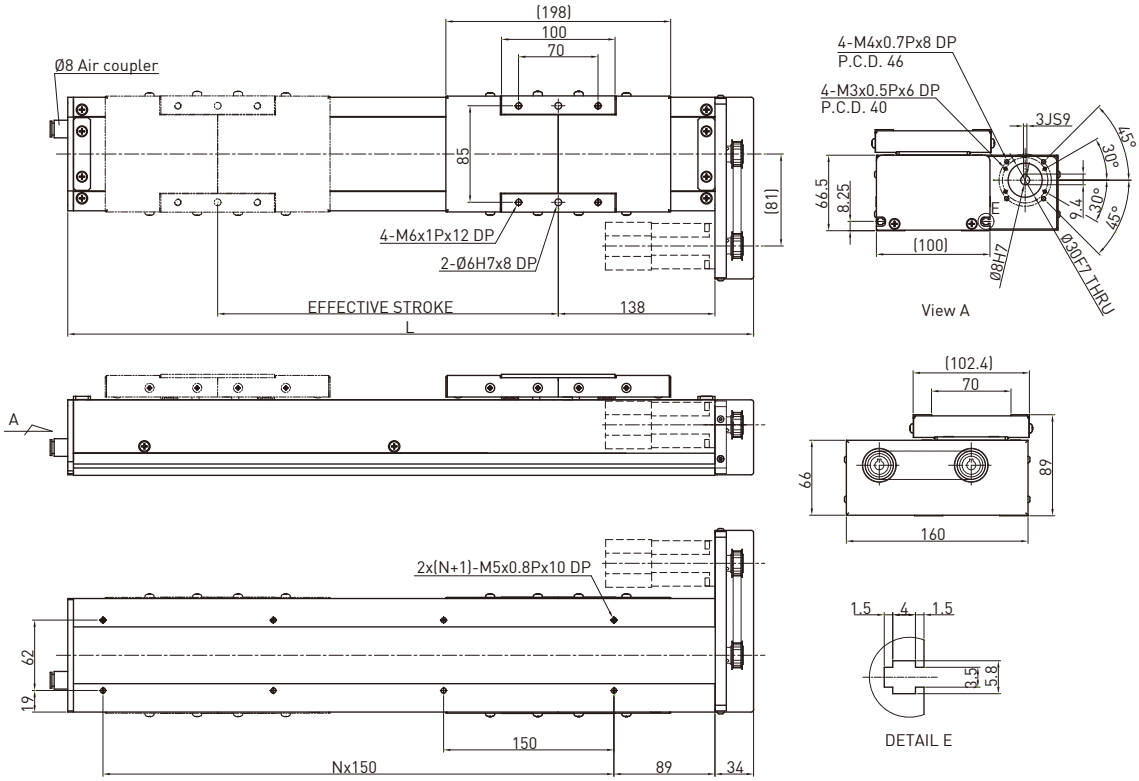

Effective stroke (mm)	L	N	Weight (kg)
200	504	2	6.0
300	604	3	6.9
400	704	3	7.8
500	804	4	8.7
600	904	5	9.6
700	1004	5	10.5
800	1104	6	11.4

AC motor output		W	100		
Drive			Ballscrew C7(normal)		
Lead		mm	5	10	20
Rated RPM		RPM	3000	3000	3000
Max linear speed*		mm/sec	250	500	1000
Rated thrust		N	280	140	70
Repeatability		mm	±0.02		
Effective stroke		mm	200~800		
Max load (H)		kg	8	6	3.5
Rated dynamic load**	Fyd	N	20	20	20
	Fzd	N	80	60	35
	Mxd	N-m	1.1	1.2	1.1
	Myd	N-m	0.9	0.9	0.9
	Mzd	N-m	0.9	0.9	0.9
Permitted load condition***	$\frac{Fy}{Fyd}+\frac{Fz}{Fzd}+\frac{Mx}{Mxd}+\frac{My}{Myd}+\frac{Mz}{Mzd}\leq 1$ Fy, Fz, Mx, My, Mz are working loads				

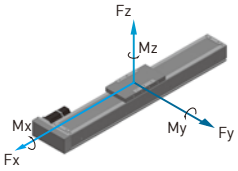

* Vibration might occur when the effective stroke is longer than 650mm.
The maximum speed should be decreased by 15% for every 100mm of increased stroke.
** The load condition is based on 10,000km operation.
*** If used on the vertical axis or in a special condition, please contact HIWIN.

Model Number for KS100-FR

KS100	-20	P	-800	A	FR	S2	M101
Model	Lead	Precision Grade	Effective Stroke	Slider Type	Motor Flange	Limit Switch	Motor
	10mm 20mm	P: Precision C: Normal		A: Standard	FR: Right	S1: OMRON SX671 S2: OMRON SX674 S3: Panasonic GX-F12A S4: Panasonic GX-F12A-P None: No Limit Switch	M05□, K05□ M10□, K10□ Motor specification: ref. catalof P.167 M:customer specified None:Without Motor

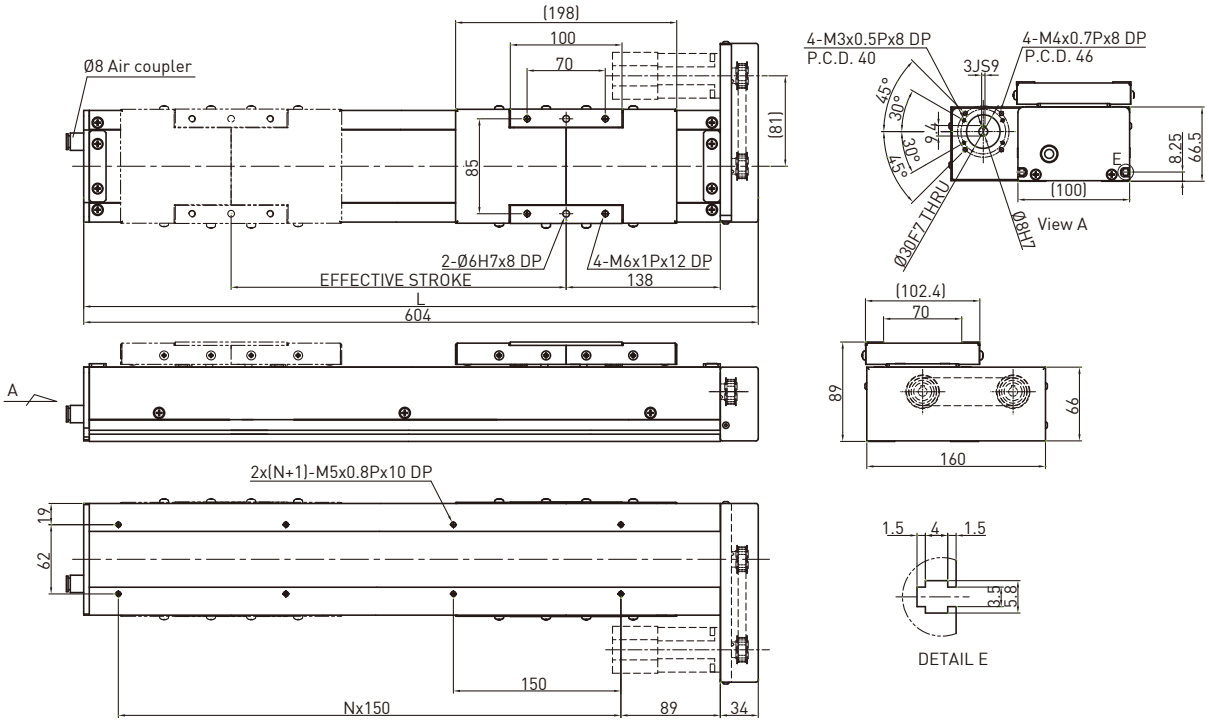

Effective stroke (mm)	L	N	Weight (kg)
200	504	2	6.0
300	604	3	6.9
400	704	3	7.8
500	804	4	8.7
600	904	5	9.6
700	1004	5	10.5
800	1104	6	11.4

AC motor output		W	100		
Drive			Ballscrew C7(normal)		
Lead		mm	5	10	20
Rated RPM		RPM	3000	3000	3000
Max linear speed*		mm/sec	250	500	1000
Rated thrust		N	280	140	70
Repeatability		mm	±0.02		
Effective stroke		mm	200~800		
Max load (H)		kg	8	6	3.5
Rated dynamic load**	Fyd	N	20	20	20
	Fzd	N	80	60	35
	Mxd	N-m	1.1	1.2	1.1
	Myd	N-m	0.9	0.9	0.9
	Mzd	N-m	0.9	0.9	0.9
Permitted load condition***	$\frac{Fy}{Fyd}+\frac{Fz}{Fzd}+\frac{Mx}{Mxd}+\frac{My}{Myd}+\frac{Mz}{Mzd}\leq 1$ Fy, Fz, Mx, My, Mz are working loads				

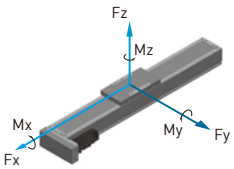

* Vibration might occur when the effective stroke is longer than 650mm.
The maximum speed should be decreased by 15% for every 100mm of increased stroke.
** The load condition is based on 10,000km operation.
*** If used on the vertical axis or in a special condition, please contact HIWIN.

Model Number for KS100B-FL

KS100	B	-84	C	-3000	A	FL	S2	M101
Model	Timing Belt	Pulley Perimeter	Precision Grade	Effective Stroke	Slider Type	Motor Flange	Limit Switch	Motor
			C: Normal		A: Standard	FL: Left	S1: OMRON SX671 S2: OMRON SX674 S3: Panasonic GX-F12A S4: Panasonic GX-F12A-P None: No Limit Switch	M05□, K05□ M10□, K10□ Motor specification: ref. catalof P.167 M:customer specified None:Without Motor

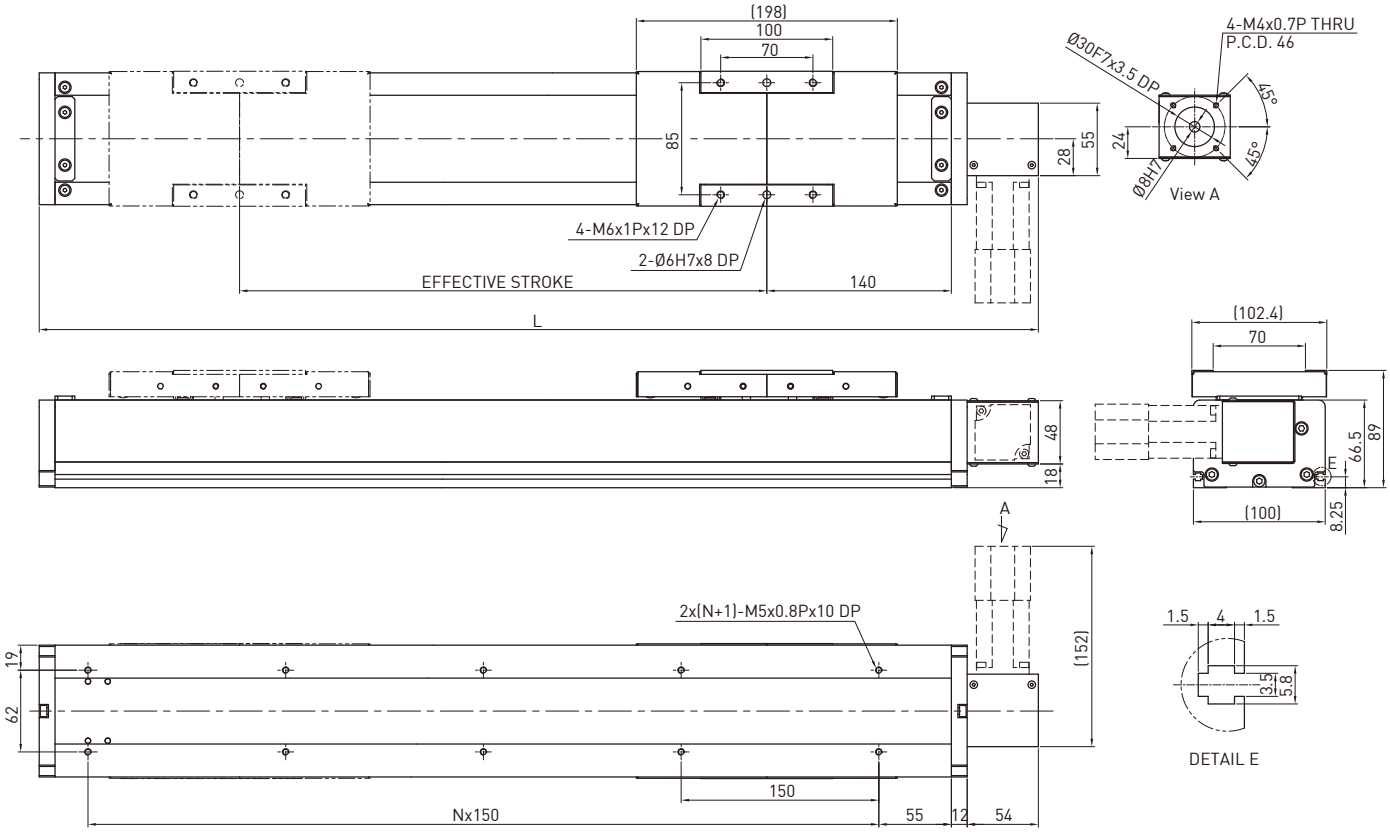

Effective stroke (mm)	L	N	Weight (kg)
200	558	2	6.1
400	758	4	7.6
600	958	5	9.1
800	1158	6	10.6
1000	1358	8	12.1
1200	1558	9	13.6
1400	1758	10	15.1
1600	1958	12	16.6
1800	2158	13	18.1
2000	2358	14	19.6
2200	2558	16	21.1
2400	2758	17	22.6
2600	2958	18	24.1
2800	3158	20	25.6
3000	3358	21	27.1

AC motor output		W	100
Drive			Timing Belt
Pulley Perimeter		mm	84
Pulley RPM		RPM	1286
Max linear speed		mm/sec	1800
Rated thrust		N	33
Repeatability		mm	±0.1
Effective stroke		mm	200~3000
Max load (H)		kg	3
Rated dynamic load*	Fyd	N	20
	Fzd	N	30
	Mxd	N-m	1.2
	Myd	N-m	1
	Mzd	N-m	1

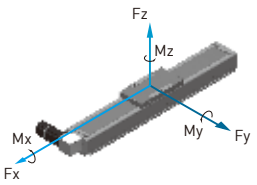

Permitted load condition**

$$\frac{Fy}{Fyd}+\frac{Fz}{Fzd}+\frac{Mx}{Mxd}+\frac{My}{Myd}+\frac{Mz}{Mzd}\leq 1$$

Fy, Fz, Mx, My, Mz are working loads

*The load condition is based on 10,000km operation.
**For horizontal applications only. If used in a special condition, please contact HIWIN.

Model Number for KS100B-FR

KS100	B	-84	C	-3000	A	FR	S2	M101
Model	Timing Belt	Pulley Perimeter	Precision Grade	Effective Stroke	Slider Type	Motor Flange	Limit Switch	Motor
			C: Normal		A: Standard	FR: Right	S1: OMRON SX671 S2: OMRON SX674 S3: Panasonic GX-F12A S4: Panasonic GX-F12A-P None: No Limit Switch	M05□, K05□ M10□, K10□ Motor specification: ref. catalof P.167 M:customer specified None:Without Motor

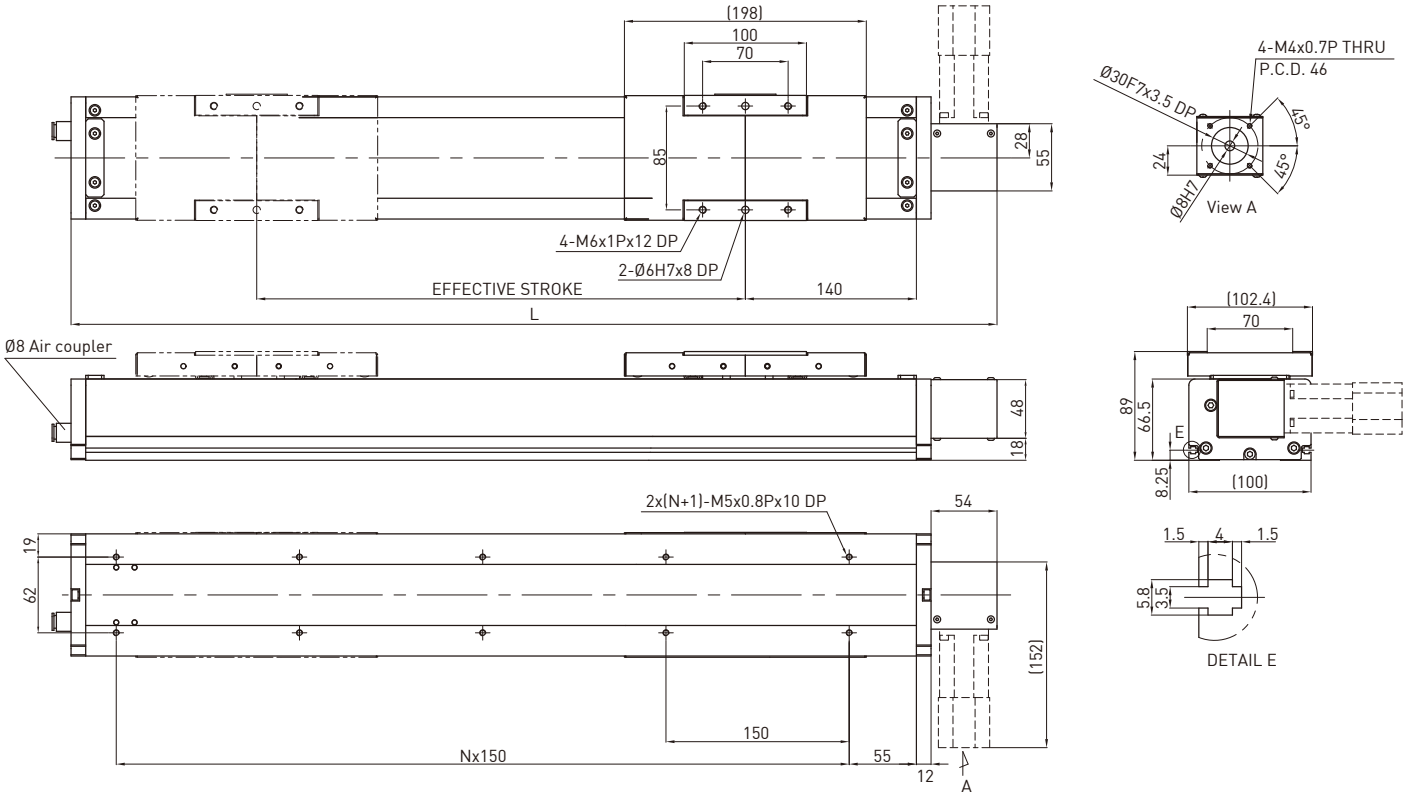

Effective stroke (mm)	L	N	Weight (kg)
200	558	2	6.1
400	758	4	7.6
600	958	5	9.1
800	1158	6	10.6
1000	1358	8	12.1
1200	1558	9	13.6
1400	1758	10	15.1
1600	1958	12	16.6
1800	2158	13	18.1
2000	2358	14	19.6
2200	2558	16	21.1
2400	2758	17	22.6
2600	2958	18	24.1
2800	3158	20	25.6
3000	3358	21	27.1

AC motor output		W	100
Drive			Timing Belt
Pulley Perimeter		mm	84
Pulley RPM		RPM	1286
Max linear speed		mm/sec	1800
Rated thrust		N	33
Repeatability		mm	±0.1
Effective stroke		mm	200~3000
Max load (H)		kg	3
Rated dynamic load*	Fyd	N	20
	Fzd	N	30
	Mxd	N-m	1.2
	Myd	N-m	1
	Mzd	N-m	1
Permitted load condition**	$\frac{Fy}{Fyd}+\frac{Fz}{Fzd}+\frac{Mx}{Mxd}+\frac{My}{Myd}+\frac{Mz}{Mzd}\leq 1$ Fy, Fz, Mx, My, Mz are working loads		

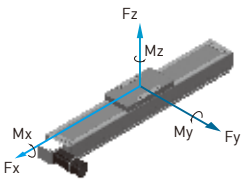

*The load condition is based on 10,000km operation.
**For horizontal applications only. If used in a special condition, please contact HIWIN.

Model Number for KS120

KS120	-20	P	-1050	A	FI	S1	M101
Model	Lead	Precision Grade	Effective Stroke	Slider Type	Motor Flange	Limit Switch	Motor
	5 mm 10 mm 20 mm	P: Precision C: Normal		A: Standard	FI: Internal	S1: OMRON SX671 S2: OMRON SX674 S3: Panasonic GX-F12A S4: Panasonic GX-F12A-P None: No Limit Switch	M05□, K05□ M10□, K10□ Motor specification: ref. catalof P.167 M:customer specified None:Without Motor

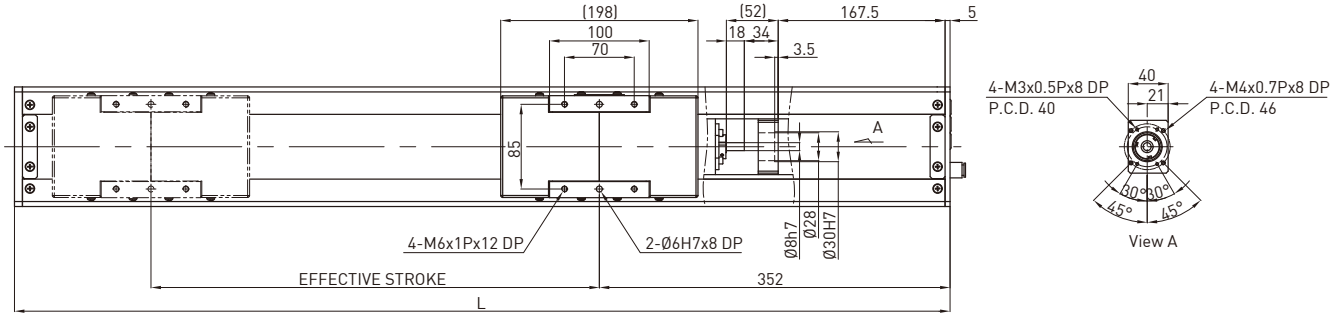

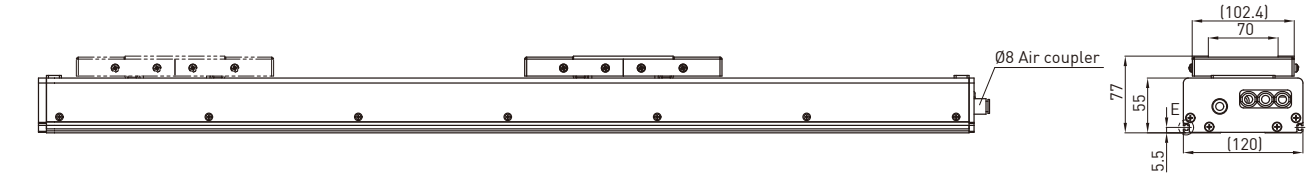

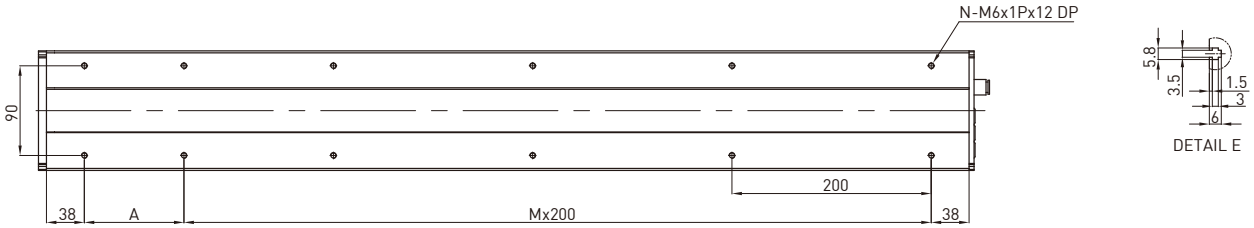

Effective stroke (mm)	L	A	M	N	Weight (kg)
100	589	100	2	8	6.32
150	639	150	2	8	6.94
200	689	200	2	8	7.57
250	739	50	3	10	8.2
300	789	100	3	10	8.83
350	839	150	3	10	9.46
400	889	200	3	10	10.09
450	939	50	4	12	10.72
500	989	100	4	12	11.35
550	1039	150	4	12	11.98
600	1089	200	4	12	12.61
650	1139	50	5	14	13.24
700	1189	100	5	14	13.87
750	1239	150	5	14	14.5
800	1289	200	5	14	15.13
850	1339	50	6	16	15.76
900	1389	100	6	16	16.39
950	1439	150	6	16	17.02
1000	1489	200	6	16	17.65
1050	1539	50	7	18	18.28

AC motor output		W	100		
Drive			Ballscrew C7(normal)		
Lead		mm	5	10	20
Rated RPM		RPM	3000	3000	3000
Max linear speed*		mm/sec	250	500	1000
Rated thrust		N	280	140	70
Repeatability		mm	±0.02		
Effective stroke		mm	100~1050		
Max load (H)		kg	50	32	20
Rated dynamic load**	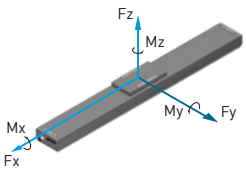	Fyd	N	50	50	50
		Fzd	N	500	320	200
		Mxd	N-m	25	27	28
		Myd	N-m	20	22	23
		Mzd	N-m	20	22	23
Permitted load condition***	$\frac{Fy}{Fyd}+\frac{Fz}{Fzd}+\frac{Mx}{Mxd}+\frac{My}{Myd}+\frac{Mz}{Mzd}\leq 1$ Fy, Fz, Mx, My, Mz are working loads				

* Vibration might occur when the effective stroke is longer than 600mm.
The maximum speed should be decreased by 15% for every 100mm of increased stroke.
** The load condition is based on 10,000km operation.
*** If used on the vertical axis or in a special condition, please contact HIWIN.

Model Number for KS140-FI

KS140	-20	P	-1100	A	FI	S2	M201
Model	Lead	Precision Grade	Effective Stroke	Slider Type	Motor Flange	Limit Switch	Motor
	10mm 20mm	P: Precision C: Normal		A: Standard	FI: Internal	S1: OMRON SX671 S2: OMRON SX674 S3: Panasonic GX-F12A S4: Panasonic GX-F12A-P None: No Limit Switch	M20□, K20□ M40□, K40□ Motor specification: ref. catalof P.167 M:customer specified None:Without Motor

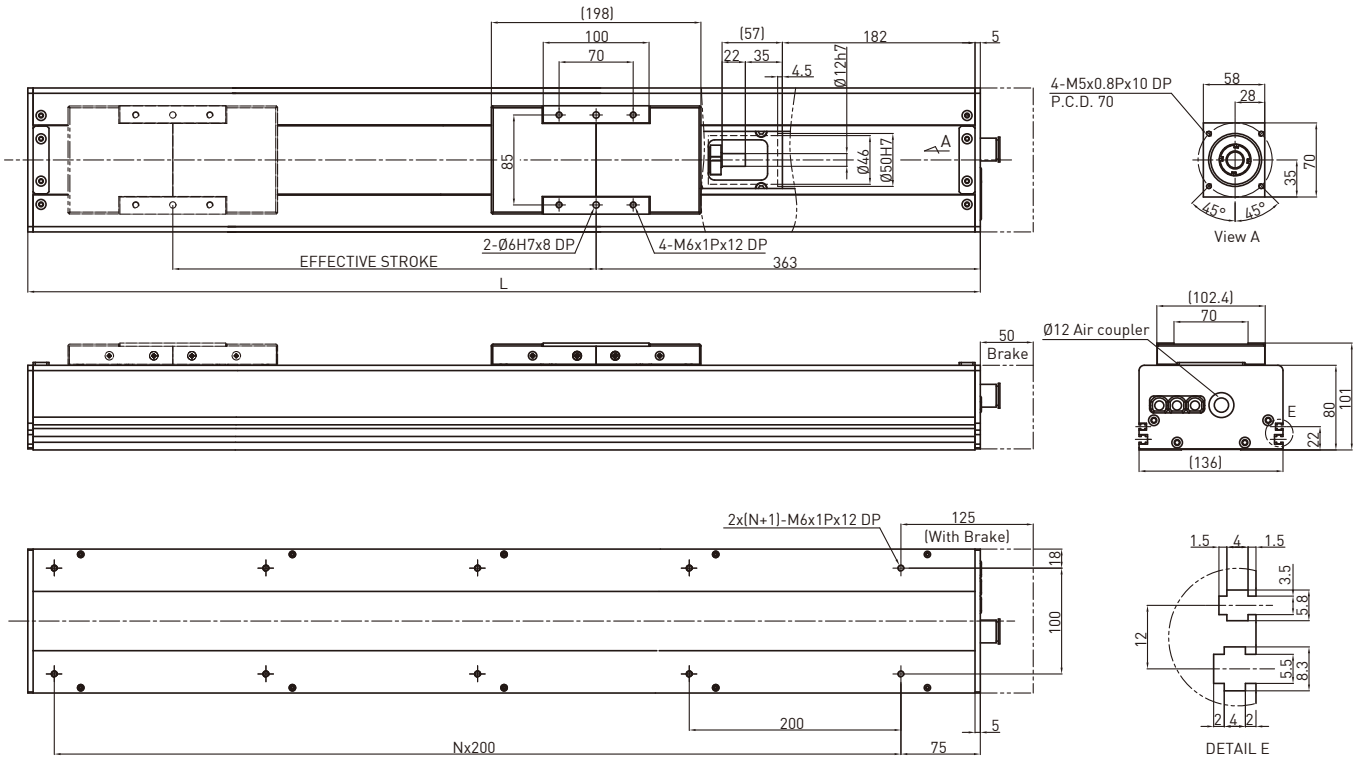

Effective stroke (mm)	L	N	Weight (kg)
200	700	3	13.5
300	800	3	14.7
400	900	4	15.9
500	1000	4	17.1
600	1100	5	18.3
700	1200	5	19.5
800	1300	6	20.7
900	1400	6	21.9
1000	1500	7	23.2
1100	1600	7	24.4

AC motor output		W	200	
Drive			Ballscrew C7(normal)	
Lead		mm	10	20
Rated RPM		RPM	3000	3000
Max linear speed*		mm/sec	500	1000
Rated thrust		N	280	140
Repeatability		mm	±0.02	
Effective stroke		mm	200~1100	
Max load (H)		kg	75	35
Rated dynamic load**	Fyd	N	50	50
	Fzd	N	750	350
	Mxd	N-m	55	60
	Myd	N-m	47	51
	Mzd	N-m	47	51
Permitted load condition***	$\frac{Fy}{Fyd}+\frac{Fz}{Fzd}+\frac{Mx}{Mxd}+\frac{My}{Myd}+\frac{Mz}{Mzd}\leq 1$ Fy, Fz, Mx, My, Mz are working loads			

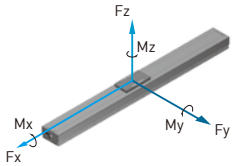

* Vibration might occur when the effective stroke is longer than 800mm.
The maximum speed should be decreased by 15% for every 100mm of increased stroke.
** The load condition is based on 10,000km operation.
*** If used on the vertical axis or in a special condition, please contact HIWIN.

Model Number for KS140-FL

KS140	-20	P	-1100	A	FL	S2	M201
Model	Lead	Precision Grade	Effective Stroke	Slider Type	Motor Flange	Limit Switch	Motor
	10mm 20mm	P: Precision C: Normal		A: Standard	FL: Left	S1: OMRON SX671 S2: OMRON SX674 S3: Panasonic GX-F12A S4: Panasonic GX-F12A-P None: No Limit Switch	M20□, K20□ M40□, K40□ Motor specification: ref. catalof P.167 M:customer specified None:Without Motor

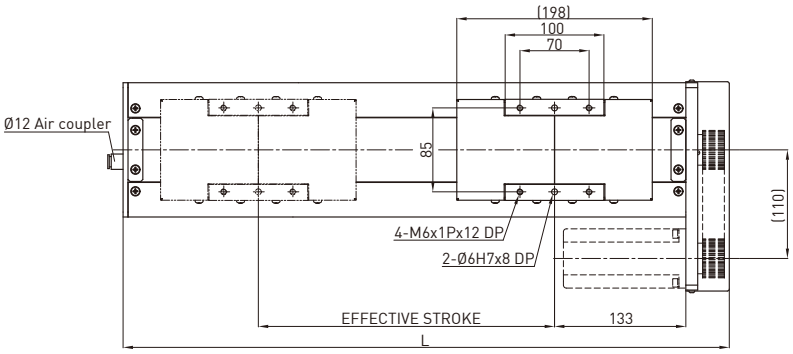

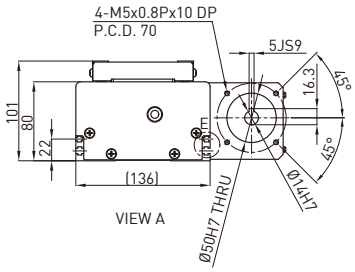

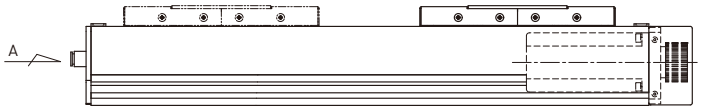

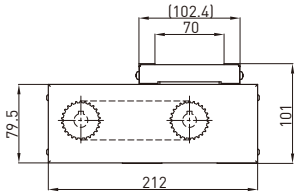

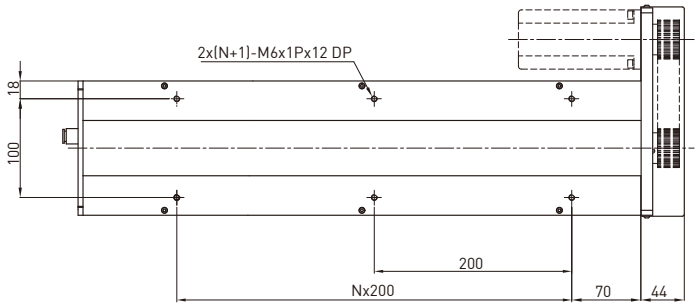

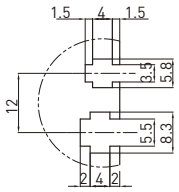

Effective stroke (mm)	L	N	Weight (kg)
200	514	1	11.5
300	614	2	13.0
400	714	2	14.5
500	814	3	16.0
600	914	3	17.5
700	1014	4	19.0
800	1114	4	20.5
900	1214	5	22.0
1000	1314	5	23.5
1100	1414	6	25.0

AC motor output		W	200	
Drive			Ballscrew C7(normal)	
Lead		mm	10	20
Rated RPM		RPM	3000	3000
Max linear speed*		mm/sec	500	1000
Rated thrust		N	280	140
Repeatability		mm	±0.02	
Effective stroke		mm	200~1100	
Max load (H)		kg	75	35
Rated dynamic load**	Fyd	N	50	50
	Fzd	N	750	350
	Mxd	N-m	55	60
	Myd	N-m	47	51
	Mzd	N-m	47	51
Permitted load condition***	$\frac{Fy}{Fyd}+\frac{Fz}{Fzd}+\frac{Mx}{Mxd}+\frac{My}{Myd}+\frac{Mz}{Mzd}\leq 1$ Fy, Fz, Mx, My, Mz are working loads			

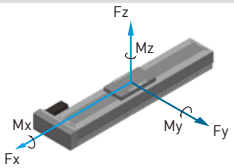

* Vibration might occur when the effective stroke is longer than 800mm.
The maximum speed should be decreased by 15% for every 100mm of increased stroke.
** The load condition is based on 10,000km operation.
*** If used on the vertical axis or in a special condition, please contact HIWIN.

Model Number for KS140-FR

KS140	-20	P	-1100	A	FR	S2	M201
Model	Lead	Precision Grade	Effective Stroke	Slider Type	Motor Flange	Limit Switch	Motor
	10mm 20mm	P: Precision C: Normal		A: Standard	FR: Right	S1: OMRON SX671 S2: OMRON SX674 S3: Panasonic GX-F12A S4: Panasonic GX-F12A-P None: No Limit Switch	M20□, K20□ M40□, K40□ Motor specification: ref. catalof P.167 M:customer specified None:Without Motor

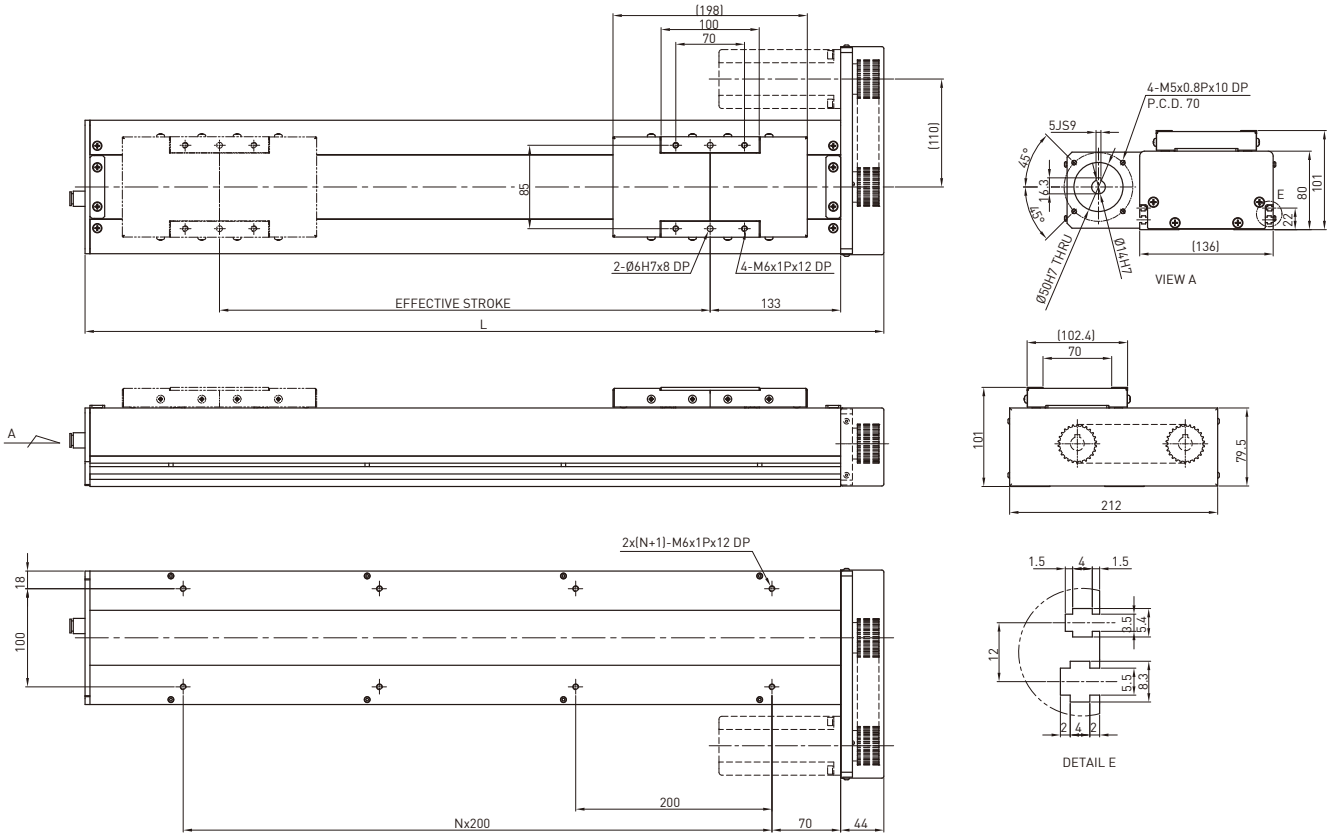

Effective stroke (mm)	L	N	Weight (kg)
200	514	1	11.5
300	614	2	13.0
400	714	2	14.5
500	814	3	16.0
600	914	3	17.5
700	1014	4	19.0
800	1114	4	20.5
900	1214	5	22.0
1000	1314	5	23.5
1100	1414	6	25.0

AC motor output		W	200	
Drive			Ballscrew C7(normal)	
Lead		mm	10	20
Rated RPM		RPM	3000	3000
Max linear speed*		mm/sec	500	1000
Rated thrust		N	280	140
Repeatability		mm	±0.02	
Effective stroke		mm	200~1100	
Max load (H)		kg	75	35
Rated dynamic load**	Fyd	N	50	50
	Fzd	N	750	350
	Mxd	N-m	55	60
	Myd	N-m	47	51
	Mzd	N-m	47	51
Permitted load condition***	$\frac{Fy}{Fyd}+\frac{Fz}{Fzd}+\frac{Mx}{Mxd}+\frac{My}{Myd}+\frac{Mz}{Mzd}\leq 1$ Fy, Fz, Mx, My, Mz are working loads			

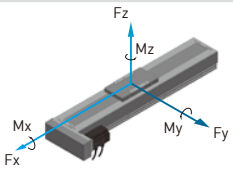

* Vibration might occur when the effective stroke is longer than 800mm.
The maximum speed should be decreased by 15% for every 100mm of increased stroke.
** The load condition is based on 10,000km operation.
*** If used on the vertical axis or in a special condition, please contact HIWIN.

Model Number for KS140B-FL

KS140	B	-120	C	-3000	A	FL	S2	M201
Model	Timing Belt	Pulley Perimeter	Precision Grade	Effective Stroke	Slider Type	Motor Flange	Limit Switch	Motor
			C: Normal		A: Standard	FL: Left	S1: OMRON SX671 S2: OMRON SX674 S3: Panasonic GX-F12A S4: Panasonic GX-F12A-P None: No Limit Switch	M20□, K20□ M40□, K40□ Motor specification: ref. catalof P.167 M:customer specified None:Without Motor

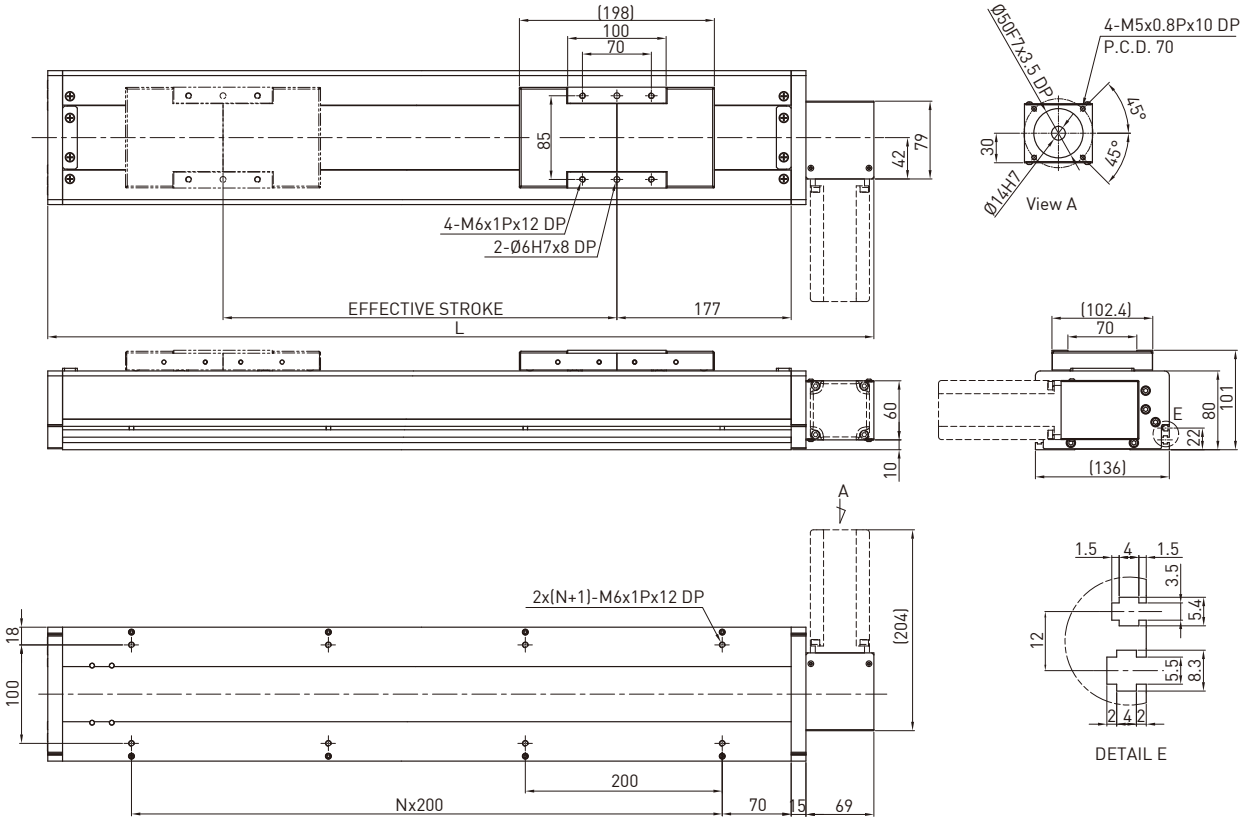

Effective stroke (mm)	L	N	Weight (kg)
200	639	2	10.4
400	839	3	12.6
600	1039	4	14.8
800	1239	5	17.0
1000	1439	6	19.2
1200	1639	7	21.4
1400	1839	8	23.6
1600	2039	9	25.8
1800	2239	10	28.0
2000	2439	11	30.2
2200	2639	12	32.4
2400	2839	13	34.6
2600	3039	14	36.8
2800	3239	15	39.0
3000	3439	16	41.2

AC motor output		W	200
Drive			Timing Belt
Pulley Perimeter		mm	120
Pulley RPM		RPM	900
Max linear speed		mm/sec	1800
Rated thrust		N	67
Repeatability		mm	±0.1
Effective stroke		mm	200~3000
Max load (H)		kg	15
Rated dynamic load*	Fyd	N	50
	Fzd	N	150
	Mxd	N-m	67
	Myd	N-m	53
	Mzd	N-m	53
Permitted load condition**	$\frac{Fy}{Fyd}+\frac{Fz}{Fzd}+\frac{Mx}{Mxd}+\frac{My}{Myd}+\frac{Mz}{Mzd}\leq 1$ Fy, Fz, Mx, My, Mz are working loads		

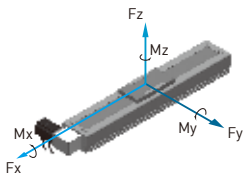

*The load condition is based on 10,000km operation.
**For horizontal applications only. If used in a special condition, please contact HIWIN.

Model Number for KS140B-FR

KS140	B	-120	C	-3000	A	FR	S2	M201
Model	Timing Belt	Pulley Perimeter	Precision Grade	Effective Stroke	Slider Type	Motor Flange	Limit Switch	Motor
			C: Normal		A: Standard	FR: Right	S1: OMRON SX671 S2: OMRON SX674 S3: Panasonic GX-F12A S4: Panasonic GX-F12A-P None: No Limit Switch	M20□, K20□ M40□, K40□ Motor specification: ref. catalof P.167 M:customer specified None:Without Motor

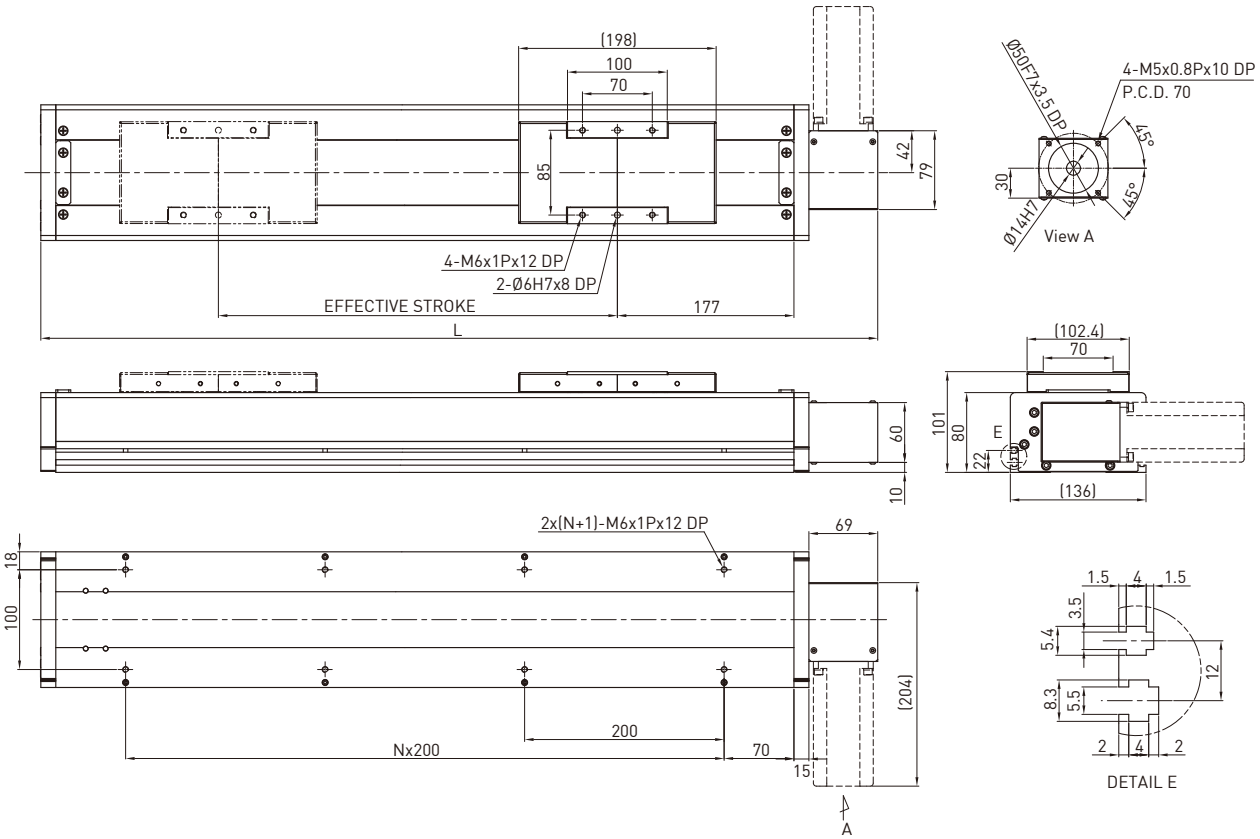

Effective stroke (mm)	L	N	Weight (kg)
200	639	2	10.4
400	839	3	12.6
600	1039	4	14.8
800	1239	5	17.0
1000	1439	6	19.2
1200	1639	7	21.4
1400	1839	8	23.6
1600	2039	9	25.8
1800	2239	10	28.0
2000	2439	11	30.2
2200	2639	12	32.4
2400	2839	13	34.6
2600	3039	14	36.8
2800	3239	15	39.0
3000	3439	16	41.2

AC motor output		W	200
Drive			Timing Belt
Pulley Perimeter		mm	120
Pulley RPM		RPM	900
Max linear speed		mm/sec	1800
Rated thrust		N	67
Repeatability		mm	±0.1
Effective stroke		mm	200~3000
Max load (H)		kg	15
Rated dynamic load*	Fyd	N	50
	Fzd	N	150
	Mxd	N-m	67
	Myd	N-m	53
	Mzd	N-m	53
Permitted load condition**	$\frac{Fy}{Fyd}+\frac{Fz}{Fzd}+\frac{Mx}{Mxd}+\frac{My}{Myd}+\frac{Mz}{Mzd}\leq 1$ Fy, Fz, Mx, My, Mz are working loads		

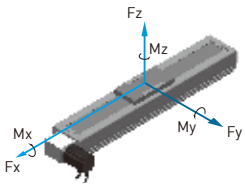

*The load condition is based on 10,000km operation.
**For horizontal applications only. If used in a special condition, please contact HIWIN.

Model Number for KS150-FI

KS150	-10	P	-1250	A	FI	S1	M201
Model	Lead	Precision Grade	Effective Stroke	Slider Type	Motor Flange	Limit Switch	Motor
	10 mm 20 mm	P: Precision C: Normal		A: Standard	FI: Internal	S1: OMRON SX671 S2: OMRON SX674 S3: Panasonic GX-F12A S4: Panasonic GX-F12A-P None: No Limit Switch	M20□, K20□ M40□, K40□ Motor specification: ref. catalof P.167 M:customer specified None:Without Motor

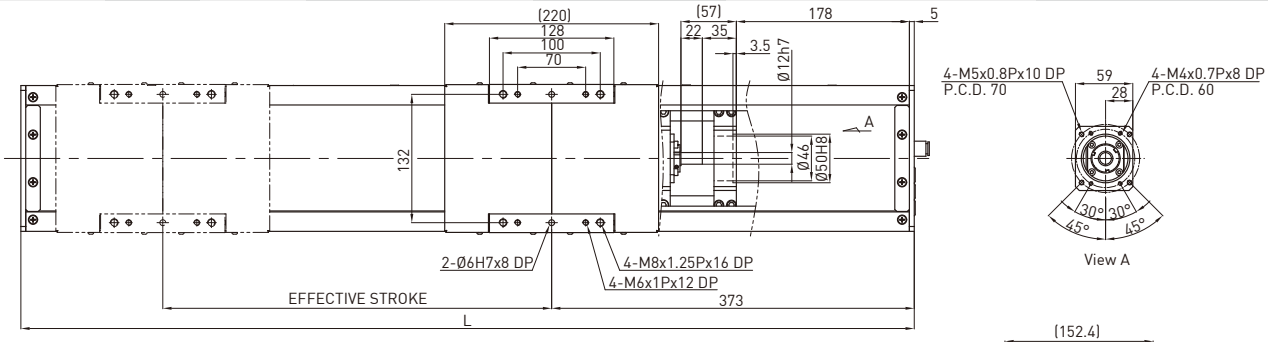

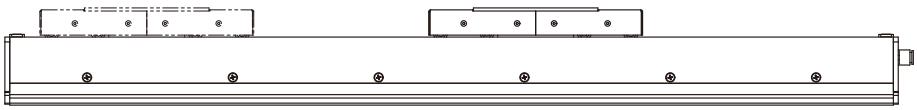

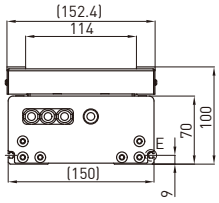

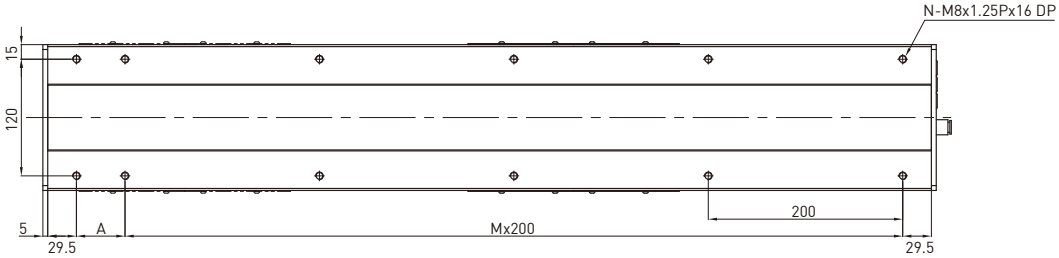

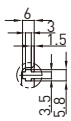

DETAIL E

Effective stroke (mm)	L	A	M	N	Weight (kg)
150	669	200	2	8	13.96
200	719	50	3	10	14.84
250	769	100	3	10	15.72
300	819	150	3	10	16.6
350	869	200	3	10	17.48
400	919	50	4	12	18.36
450	969	100	4	12	19.24
500	1019	150	4	12	20.12
550	1069	200	4	12	21
600	1119	50	5	14	21.88
650	1169	100	5	14	22.76
700	1219	150	5	14	23.64
750	1269	200	5	14	24.52
800	1319	50	6	16	25.4
850	1369	100	6	16	26.28
900	1419	150	6	16	27.16
950	1469	200	6	16	28.04
1000	1519	50	7	18	28.92
1050	1569	100	7	18	29.8
1100	1619	150	7	18	30.68
1150	1669	200	7	18	31.56
1200	1719	50	8	20	32.44
1250	1769	100	8	20	33.32

AC motor output		W	200	
Drive			Ballscrew C7(normal)	
Lead		mm	10	20
Rated RPM		RPM	3000	3000
Max linear speed*		mm/sec	500	1000
Rated thrust		N	280	140
Repeatability		mm	±0.02	
Effective stroke		mm	150~1250	
Max load (H)		kg	80	40
Rated dynamic load**	Fyd	N	50	50
	Fzd	N	800	400
	Mxd	N-m	56	63
	Myd	N-m	49	53
	Mzd	N-m	49	53
Permitted load condition***	$\frac{Fy}{Fyd}+\frac{Fz}{Fzd}+\frac{Mx}{Mxd}+\frac{My}{Myd}+\frac{Mz}{Mzd}\leq 1$ Fy, Fz, Mx, My, Mz are working loads			

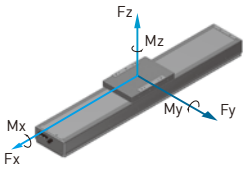

* Vibration might occur when the effective stroke is longer than 700mm.
The maximum speed should be decreased by 15% for every 100mm of increased stroke.
** The load condition is based on 10,000km operation.
*** If used on the vertical axis or in a special condition, please contact HIWIN.

Model Number for KS180-FI

KS180	-20	P	-1200	A	FI	S2	M401
Model	Lead	Precision Grade	Effective Stroke	Slider Type	Motor Flange	Limit Switch	Motor
	10mm 20mm	P: Precision C: Normal		A: Standard	FI: Internal	S1: OMRON SX671 S2: OMRON SX674 S3: Panasonic GX-F12A S4: Panasonic GX-F12A-P None: No Limit Switch	M20□, K20□ M40□, K40□ Motor specification: ref. catalof P.167 M:customer specified None:Without Motor

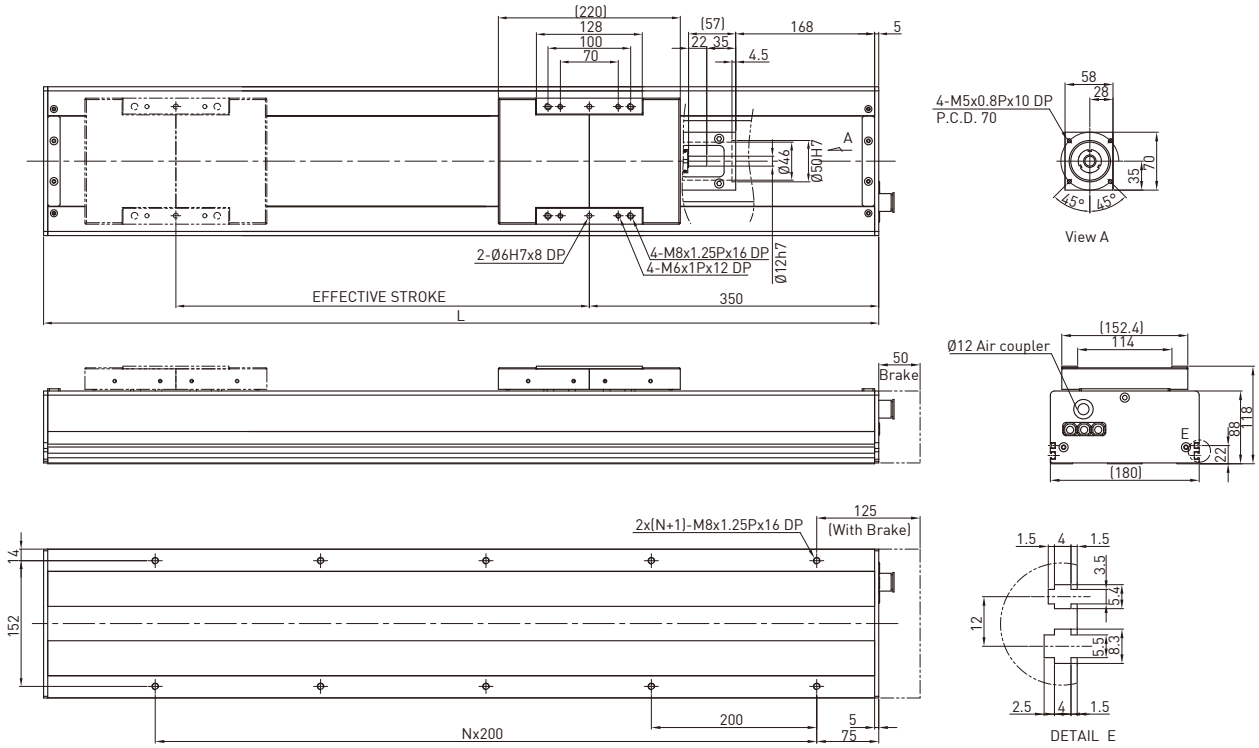

Effective stroke (mm)	L	N	Weight (kg)
200	710	3	16.5
300	810	3	18.1
400	910	4	19.7
500	1010	4	21.3
600	1110	5	22.9
700	1210	5	24.4
800	1310	6	26
900	1410	6	27.6
1000	1510	7	29.2
1100	1610	7	30.8
1200	1710	8	32.3

AC motor output		W	400	
Drive			Ballscrew C7(normal)	
Lead		mm	10	20
Rated RPM		RPM	3000	3000
Max linear speed*		mm/sec	500	1000
Rated thrust		N	560	280
Repeatability		mm	±0.02	
Effective stroke		mm	200~1200	
Max load (H)		kg	110	50
Rated dynamic load**	Fyd	N	50	50
	Fzd	N	1100	500
	Mxd	N-m	60	65
	Myd	N-m	45	53
	Mzd	N-m	45	53
Permitted load condition***	$\frac{Fy}{Fyd}+\frac{Fz}{Fzd}+\frac{Mx}{Mxd}+\frac{My}{Myd}+\frac{Mz}{Mzd}\leq 1$ Fy, Fz, Mx, My, Mz are working loads			

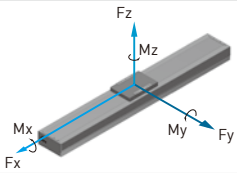

* Vibration might occur when the effective stroke is longer than 800mm.
The maximum speed should be decreased by 15% for every 100mm of increased stroke.
** The load condition is based on 10,000km operation.
*** If used on the vertical axis or in a special condition, please contact HIWIN.

Model Number for KS180-FL

KS180	-20	P	-1200	A	FL	S2	M401
Model	Lead	Precision Grade	Effective Stroke	Slider Type	Motor Flange	Limit Switch	Motor
	10mm 20mm	P: Precision C: Normal		A: Standard	FL: Left	S1: OMRON SX671 S2: OMRON SX674 S3: Panasonic GX-F12A S4: Panasonic GX-F12A-P None: No Limit Switch	M20□, K20□ M40□, K40□ Motor specification: ref. catalof P.167 M:customer specified None:Without Motor

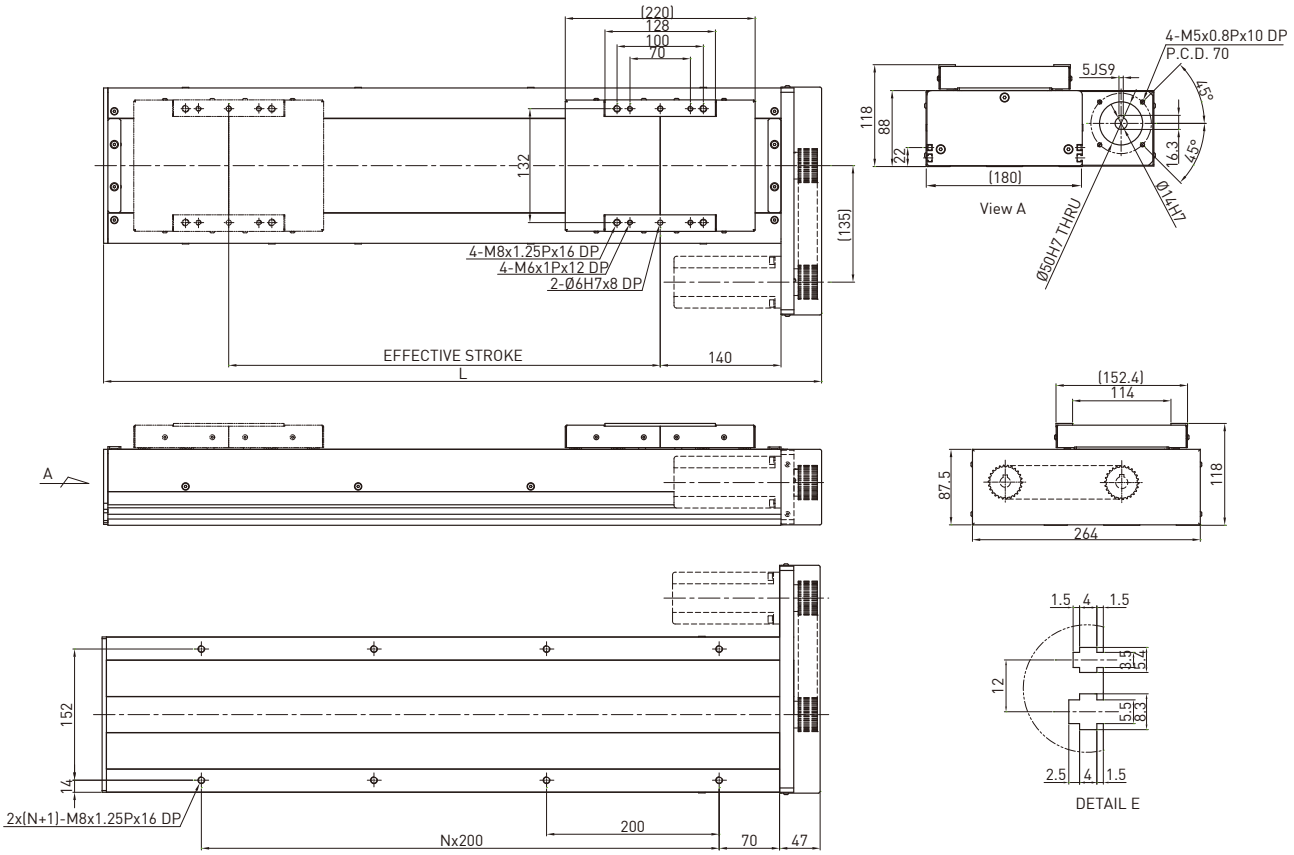

Effective stroke (mm)	L	N	Weight (kg)
200	532	1	11.3
300	632	2	12.3
400	732	2	13.3
500	832	3	14.3
600	932	3	15.3
700	1032	4	16.3
800	1132	4	17.3
900	1232	5	18.3
1000	1332	5	19.3
1100	1432	6	20.3
1200	1532	6	21.3

AC motor output		W	400	
Drive			Ballscrew C7(normal)	
Lead		mm	10	20
Rated RPM		RPM	3000	3000
Max linear speed*		mm/sec	500	1000
Rated thrust		N	560	280
Repeatability		mm	±0.02	
Effective stroke		mm	200~1200	
Max load (H)		kg	110	50
Rated dynamic load**	Fyd	N	50	50
	Fzd	N	1100	500
	Mxd	N-m	60	65
	Myd	N-m	45	53
	Mzd	N-m	45	53
Permitted load condition***	$\frac{Fy}{Fyd}+\frac{Fz}{Fzd}+\frac{Mx}{Mxd}+\frac{My}{Myd}+\frac{Mz}{Mzd}\leq 1$ Fy, Fz, Mx, My, Mz are working loads			

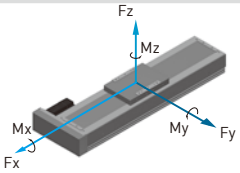

* Vibration might occur when the effective stroke is longer than 800mm.
The maximum speed should be decreased by 15% for every 100mm of increased stroke.
** The load condition is based on 10,000km operation.
*** If used on the vertical axis or in a special condition, please contact HIWIN.

Model Number for KS180-FR

KS180	-20	P	-1200	A	FR	S2	M401
Model	Lead	Precision Grade	Effective Stroke	Slider Type	Motor Flange	Limit Switch	Motor
	10mm 20mm	P: Precision C: Normal		A: Standard	FR: Right	S1: OMRON SX671 S2: OMRON SX674 S3: Panasonic GX-F12A S4: Panasonic GX-F12A-P None: No Limit Switch	M20□, K20□ M40□, K40□ Motor specification: ref. catalof P.167 M:customer specified None:Without Motor

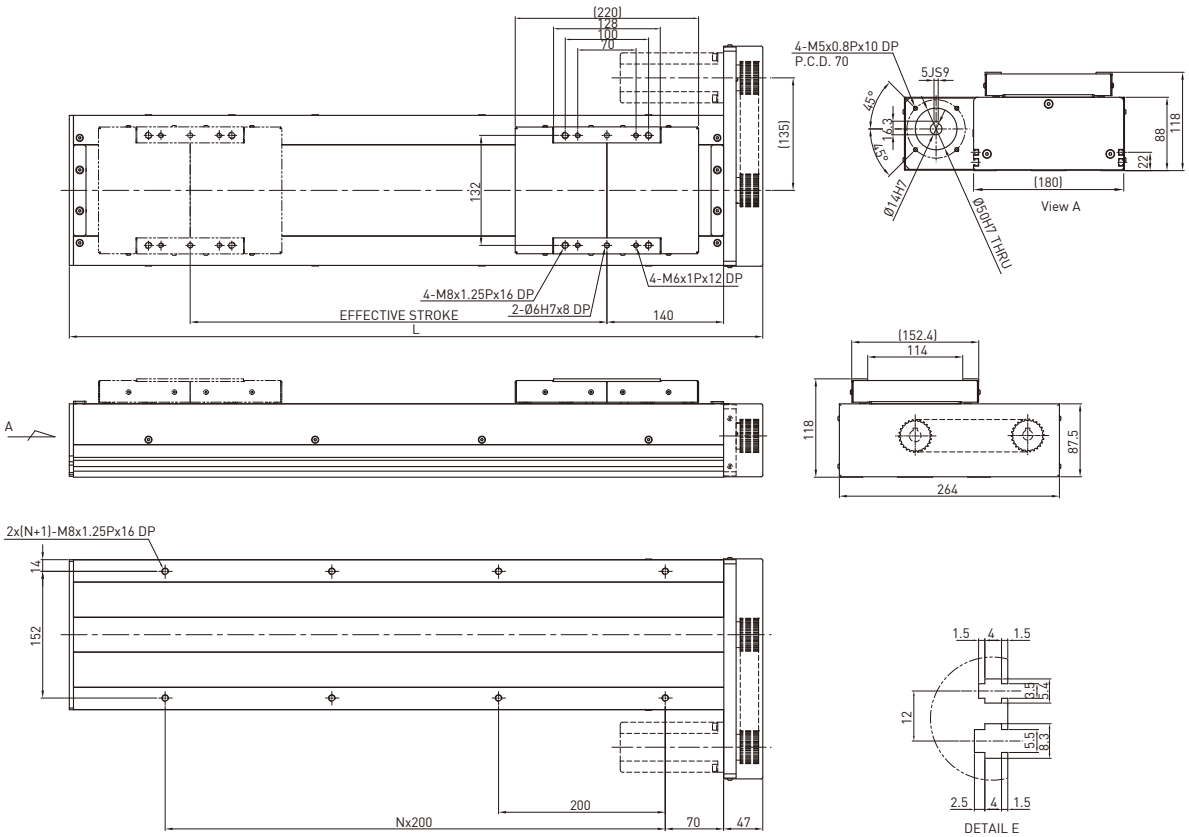

Effective stroke (mm)	L	N	Weight (kg)
200	532	1	11.3
300	632	2	12.3
400	732	2	13.3
500	832	3	14.3
600	932	3	15.3
700	1032	4	16.3
800	1132	4	17.3
900	1232	5	18.3
1000	1332	5	19.3
1100	1432	6	20.3
1200	1532	6	21.3

AC motor output		W	400	
Drive			Ballscrew C7(normal)	
Lead		mm	10	20
Rated RPM		RPM	3000	3000
Max linear speed*		mm/sec	500	1000
Rated thrust		N	560	280
Repeatability		mm	±0.02	
Effective stroke		mm	200~1200	
Max load (H)		kg	110	50
Rated dynamic load**	Fyd	N	50	50
	Fzd	N	1100	500
	Mxd	N-m	60	65
	Myd	N-m	45	53
	Mzd	N-m	45	53
Permitted load condition***	$\frac{Fy}{Fyd}+\frac{Fz}{Fzd}+\frac{Mx}{Mxd}+\frac{My}{Myd}+\frac{Mz}{Mzd}\leq 1$ Fy, Fz, Mx, My, Mz are working loads			

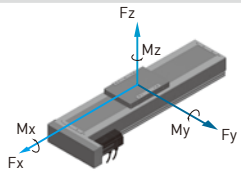

* Vibration might occur when the effective stroke is longer than 800mm.
The maximum speed should be decreased by 15% for every 100mm of increased stroke.
** The load condition is based on 10,000km operation.
*** If used on the vertical axis or in a special condition, please contact HIWIN.

Model Number for KS180B-FL

KS180	B	-120	C	-3000	A	FL	S2	M401
Model	Timing Belt	Pulley Perimeter	Precision Grade	Effective Stroke	Slider Type	Motor Flange	Limit Switch	Motor
			C: Normal		A: Standard	FL: Left	S1: OMRON SX671 S2: OMRON SX674 S3: Panasonic GX-F12A S4: Panasonic GX-F12A-P None: No Limit Switch	M20□, K20□ M40□, K40□ Motor specification: ref. catalof P.167 M:customer specified None:Without Motor

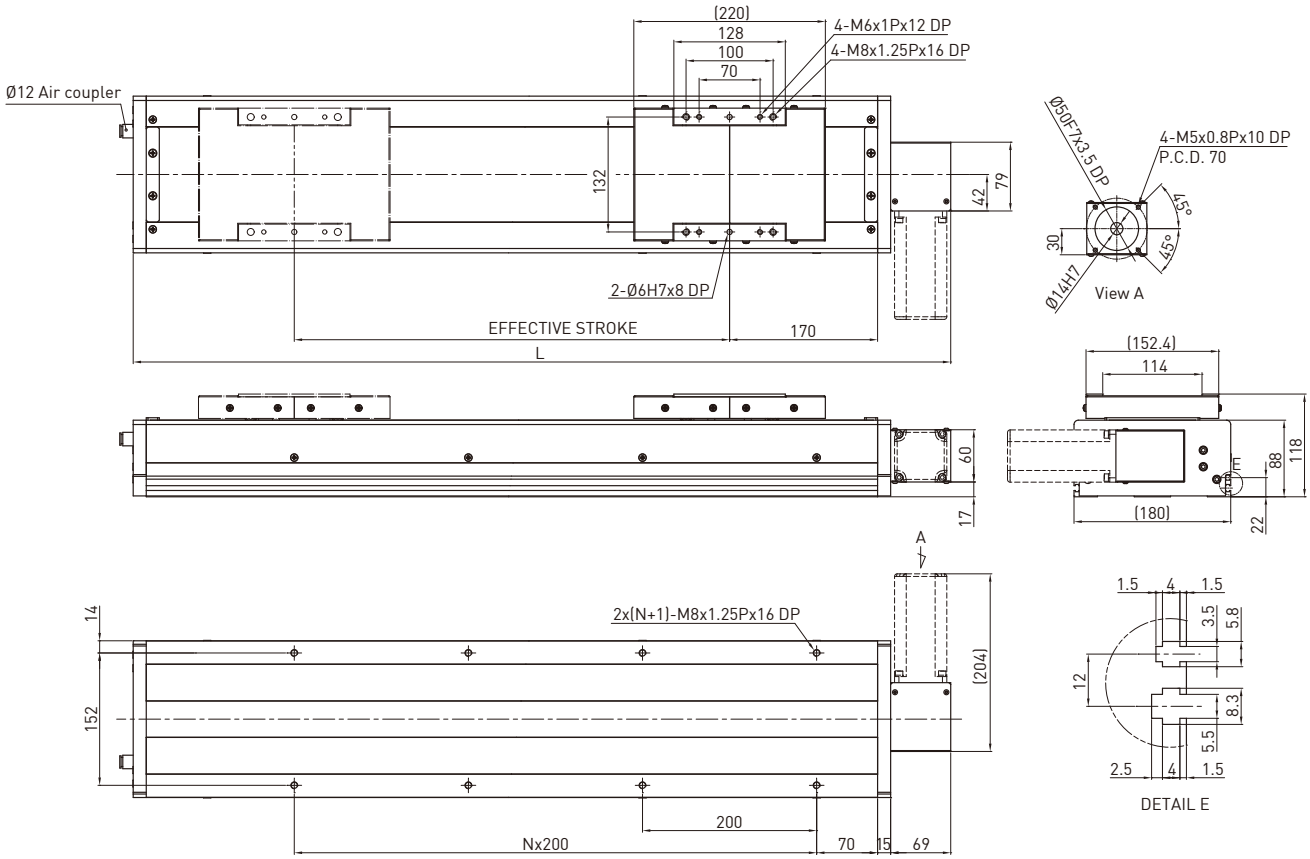

Effective stroke (mm)	L	N	Weight (kg)
200	639	2	14.2
400	839	3	17.0
600	1039	4	19.8
800	1239	5	22.6
1000	1439	6	25.4
1200	1639	7	28.2
1400	1839	8	31.0
1600	2039	9	33.8
1800	2239	10	36.6
2000	2439	11	39.4
2200	2639	12	42.2
2400	2839	13	45.0
2600	3039	14	47.8
2800	3239	15	50.6
3000	3439	16	53.4

AC motor output		W	400
Drive			Timing Belt
Pulley Perimeter		mm	120
Pulley RPM		RPM	900
Max linear speed		mm/sec	1800
Rated thrust		N	133
Repeatability		mm	±0.1
Effective stroke		mm	200~3000
Max load (H)		kg	30
Rated dynamic load*	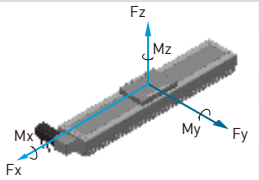	Fyd	N	50
		Fzd	N	300
		Mxd	N-m	70
		Myd	N-m	55
		Mzd	N-m	55
Permitted load condition**	$\frac{Fy}{Fyd}+\frac{Fz}{Fzd}+\frac{Mx}{Mxd}+\frac{My}{Myd}+\frac{Mz}{Mzd}\leq 1$ Fy, Fz, Mx, My, Mz are working loads		

*The load condition is based on 10,000km operation.
**For horizontal applications only. If used in a special condition, please contact HIWIN.

Model Number for KS180B-FR

KS180	B	-120	C	-3000	A	FR	S2	M401
Model	Timing Belt	Pulley Perimeter	Precision Grade	Effective Stroke	Slider Type	Motor Flange	Limit Switch	Motor
			C: Normal		A: Standard	FR: Right	S1: OMRON SX671 S2: OMRON SX674 S3: Panasonic GX-F12A S4: Panasonic GX-F12A-P None: No Limit Switch	M20□, K20□ M40□, K40□ Motor specification: ref. catalof P.167 M:customer specified None:Without Motor

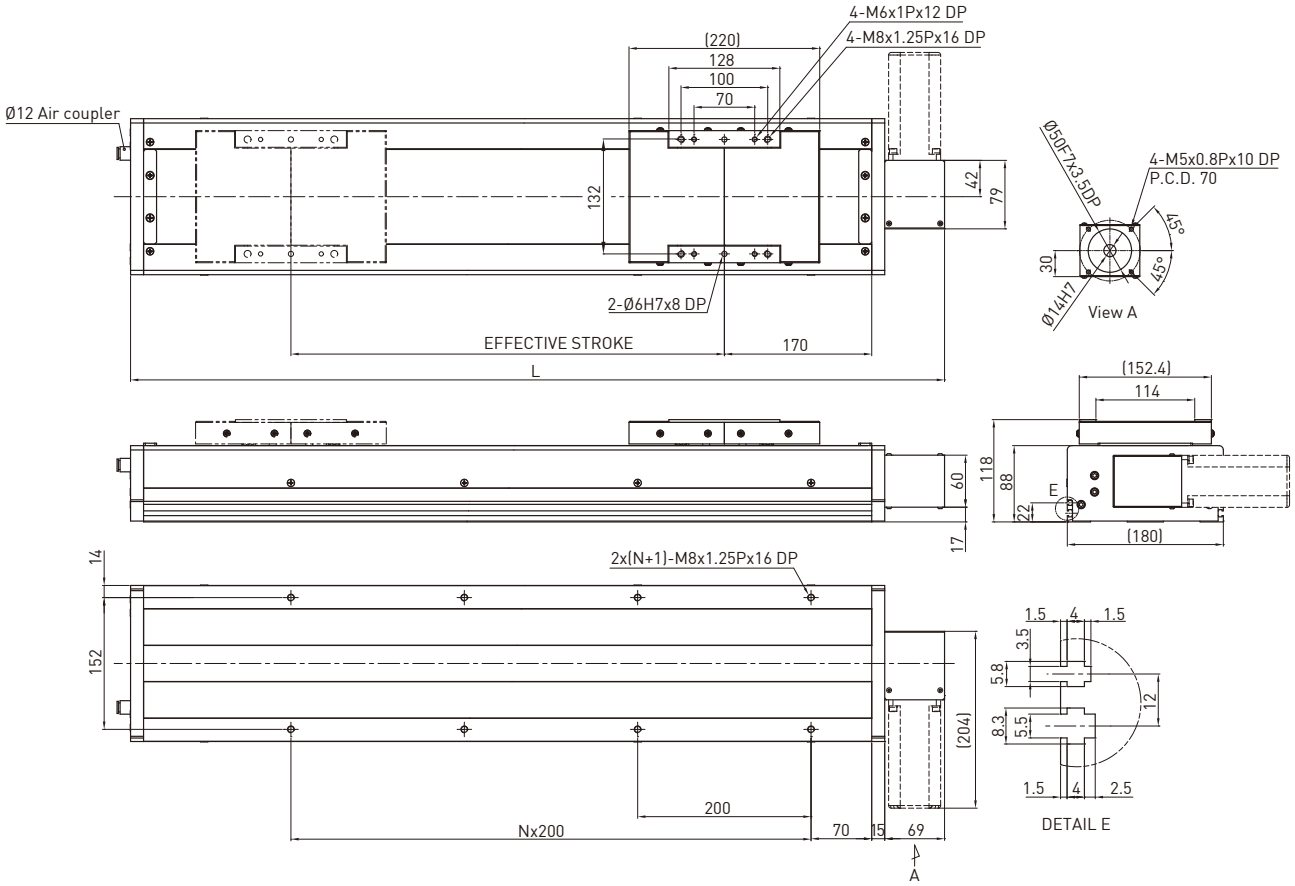

Effective stroke (mm)	L	N	Weight (kg)
200	639	2	14.2
400	839	3	17.0
600	1039	4	19.8
800	1239	5	22.6
1000	1439	6	25.4
1200	1639	7	28.2
1400	1839	8	31.0
1600	2039	9	33.8
1800	2239	10	36.6
2000	2439	11	39.4
2200	2639	12	42.2
2400	2839	13	45.0
2600	3039	14	47.8
2800	3239	15	50.6
3000	3439	16	53.4

AC motor output		W	400
Drive			Timing Belt
Pulley Perimeter		mm	120
Pulley RPM		RPM	900
Max linear speed		mm/sec	1800
Rated thrust		N	133
Repeatability		mm	±0.1
Effective stroke		mm	200~3000
Max load (H)		kg	30
Rated dynamic load*	Fyd	N	50
	Fzd	N	300
	Mxd	N-m	70
	Myd	N-m	55
	Mzd	N-m	55
Permitted load condition**	$\frac{Fy}{Fyd}+\frac{Fz}{Fzd}+\frac{Mx}{Mxd}+\frac{My}{Myd}+\frac{Mz}{Mzd}\leq 1$ Fy, Fz, Mx, My, Mz are working loads		

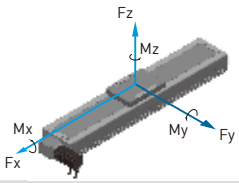

*The load condition is based on 10,000km operation.
**For horizontal applications only. If used in a special condition, please contact HIWIN.

6.4 Motor Adaptor Flange List

KS90

Motor Adaptor Flange F0

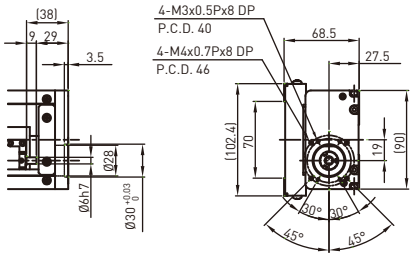

Motor Adaptor Flange F1

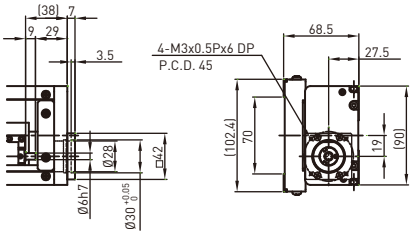

KS100

Motor Adaptor Flange FI

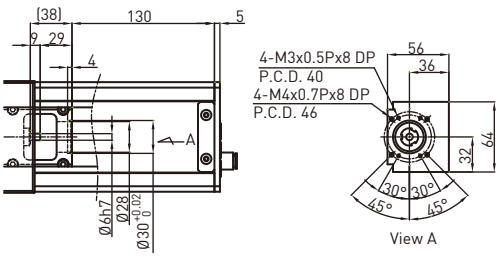

Motor Adaptor Flange F1

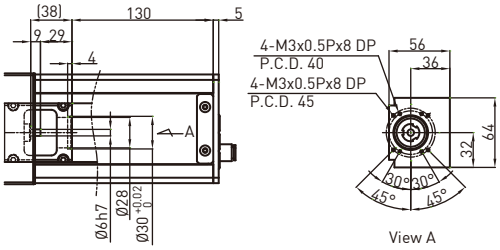

KS120

Motor Adaptor Flange FI

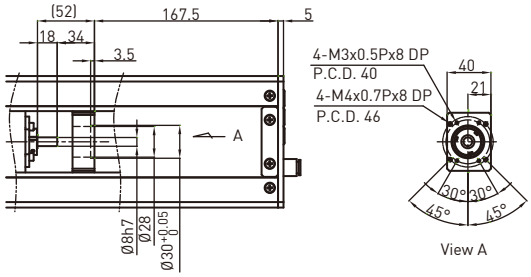

KS140

Motor Adaptor Flange FI

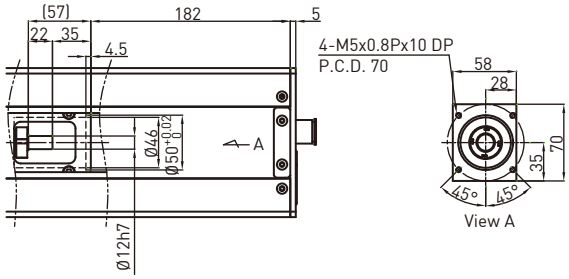

KS150

Motor Adaptor Flange FI

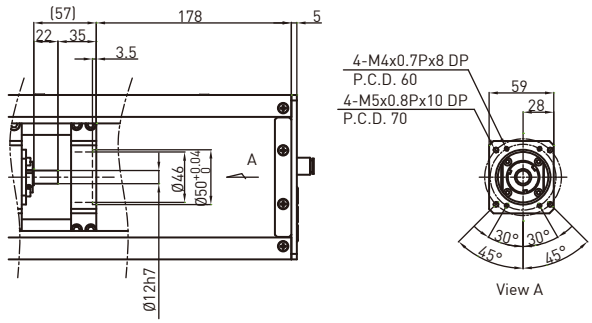

KS180

Motor Adaptor Flange FI

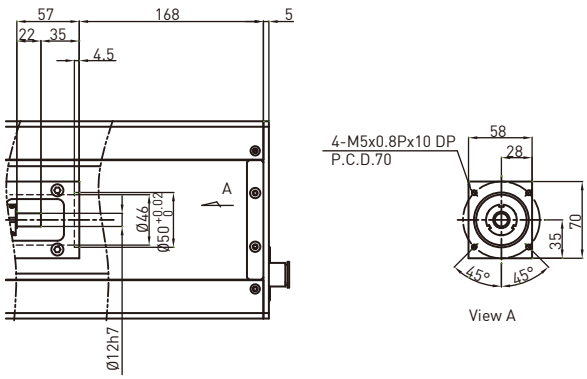

6.5 Motor Housing and Motor Adaptor Flange(KS Series)

HIWIN Mikrosystem Servo Motor

Motor Output	Motor	Flange Selection						Drive	Remarks
		KS90	KS100	KS120	KS140	KS150	KS180		
50W	FRLS052□□A4□	F1	F1	F1	-	-	-	D2T-0123-S-A□	220V
100W	FRLS102□□A4□	F1	F1	F1	-	-	-		220V
200W	FRLS202□□06□	-	-	-	FI	FI	FI	D2T-0423-S-B□	220V
400W	FRLS402□□06□	-	-	-	FI	FI	FI		220V
750W	FRMS752□□08□	-	-	-	-	-	-	D2-T1023-S-C□	220V

Mitsubishi Servo Motor

Motor Output	Motor	Flange Selection						Drive	Remarks
		KS90	KS100	KS120	KS140	KS150	KS180		
50W	HF-KP053	F0	FI	FI	-	-	-	MR-J3S-10A	220V
100W	HF-KP13	F0	FI	FI	-	-	-	MR-J3S-10A	220V
200W	HF-KP23	-	-	-	FI	FI	FI	MR-J3S-20A	220V
400W	HF-KP43	-	-	-	FI	FI	FI	MR-J3S-40A	220V
750W	HF-KP73	-	-	-	-	-	-	MR-J3S-70A	220V

Panasonic Servo Motor

Motor Output	Motor	Flange Selection						Drive	Remarks
		KS90	KS100	KS120	KS140	KS150	KS180		
50W	MSMD5AZP1	F1	F1	F1	-	-	-	MADDT1105	110V
50W	MSMD5AZP1	F1	F1	F1	-	-	-	MADDT1205	220V
100W	MSMD011P1	F1	F1	F1	-	-	-	MADDT1107	110V
100W	MSMD012P1	F1	F1	F1	-	-	-	MADDT1205	220V
200W	MSMD021P1	-	-	-	-	-	-	MADDT2110	110V
200W	MSMD022P1	-	-	-	-	-	-	MADDT1207	220V
400W	MSMD041P1	-	-	-	-	-	-	MADDT3120	110V
400W	MSMD042P1	-	-	-	-	-	-	MADDT2210	220V
750W	MSMD082S1	-	-	-	-	-	-	MADDT3520	220V

Yasukawa Servo Motor

Motor Output	Motor	Flange Selection						Drive	Remarks
		KS90	KS100	KS120	KS140	KS150	KS180		
50W	SGMAV-A5ADA61	F0	FI	FI	-	-	-	SGDV-R70A01A	with key
50W	SGMAV-A5ADA2C	F0	FI	FI	-	-	-	SGDV-R70A01A	no key
50W	SGMAV-A5ADA21	F0	FI	FI	-	-	-	SGDV-R70A01A	no key
100W	SGMAV-01ADA21	F0	FI	F0	-	-	-	SGDV-R90A01A	
200W	SGMAV-02ADA21	-	-	-	FI	FI	FI	SGDV-1R6A01A	
400W	SGMAV-04ADA21	-	-	-	FI	FI	FI	SGDV-2R8A01A	
750W	SGMAV-08ADA21	-	-	-	-	-	-	SGDV-5R5A01A	

Single-Axis Robot
7. KU Series

7.1 Features

◎ Lightweight aluminum base
◎ Highly dustproof
◎ High accuracy, high efficiency, high reliability
◎ Cost effective
◎ Easy installation and maintenance

7.2 Applications

◎ Precision industry & semiconductor
◎ Inspection, testing & assembly equipment
◎ Optical & mediical equipment

7.3 KU Mounting

Square nut

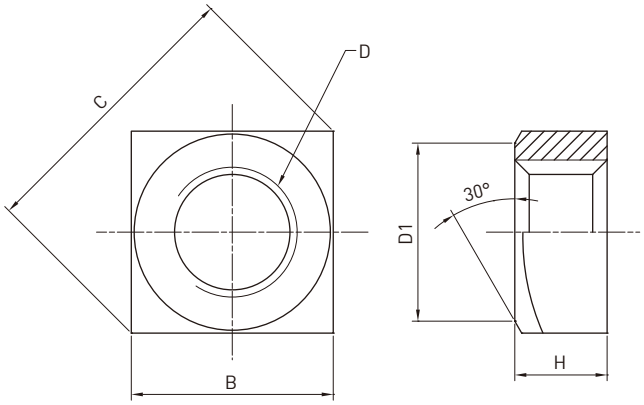

	B	C	D	D1	H
KU60	7	9.9	M4x0.7	6.8	3.2
KU80	8	11.3	M5x0.8	7.8	4

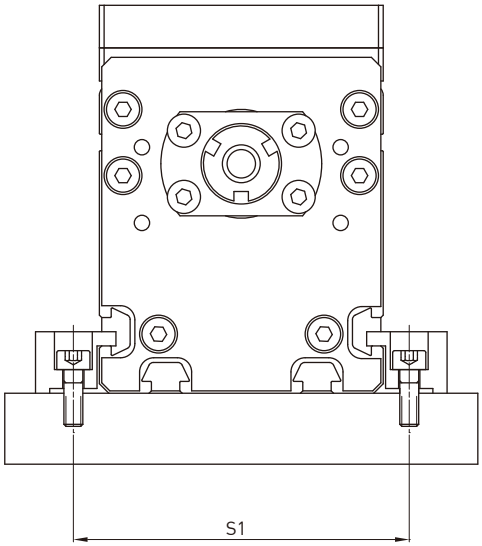

KU Model	S1	Screw
KU80	93	M5
KU60	71	M4

Note:In addition to square nuts, special nuts are also available. Please contant HIWIN sales.

Fixed plate

◎ KU060

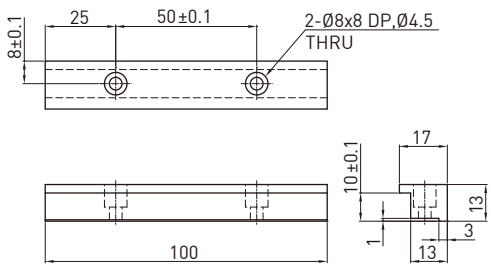

◎ KU080

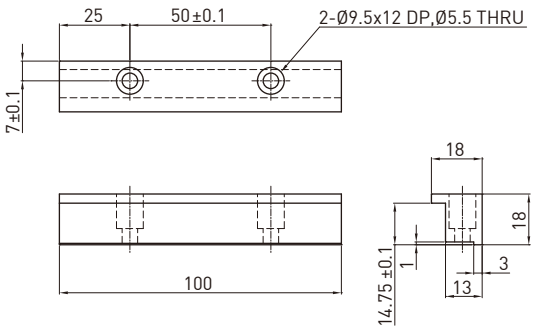

7.4 KU Series

Model Number for KU060

KU060	-10	P	-600	A	F0	S1	M101
Model	Lead	Precision Grade	Effective Stroke	Slider Type	Motor Flange	Limit Switch	Motor
	5 mm 10 mm	C: Normal P: Precision		A: Standard	F0: 100W F: No Flange	S1: OMRON SX671 S2: OMRON SX674 S3: Panasonic GX-F12A S4: Panasonic GX-F12A-P None: No Limit Switch	M05□, K05□ M10□, K10□ Motor specification: ref. catalof P.167 M:customer specified None:Without Motor

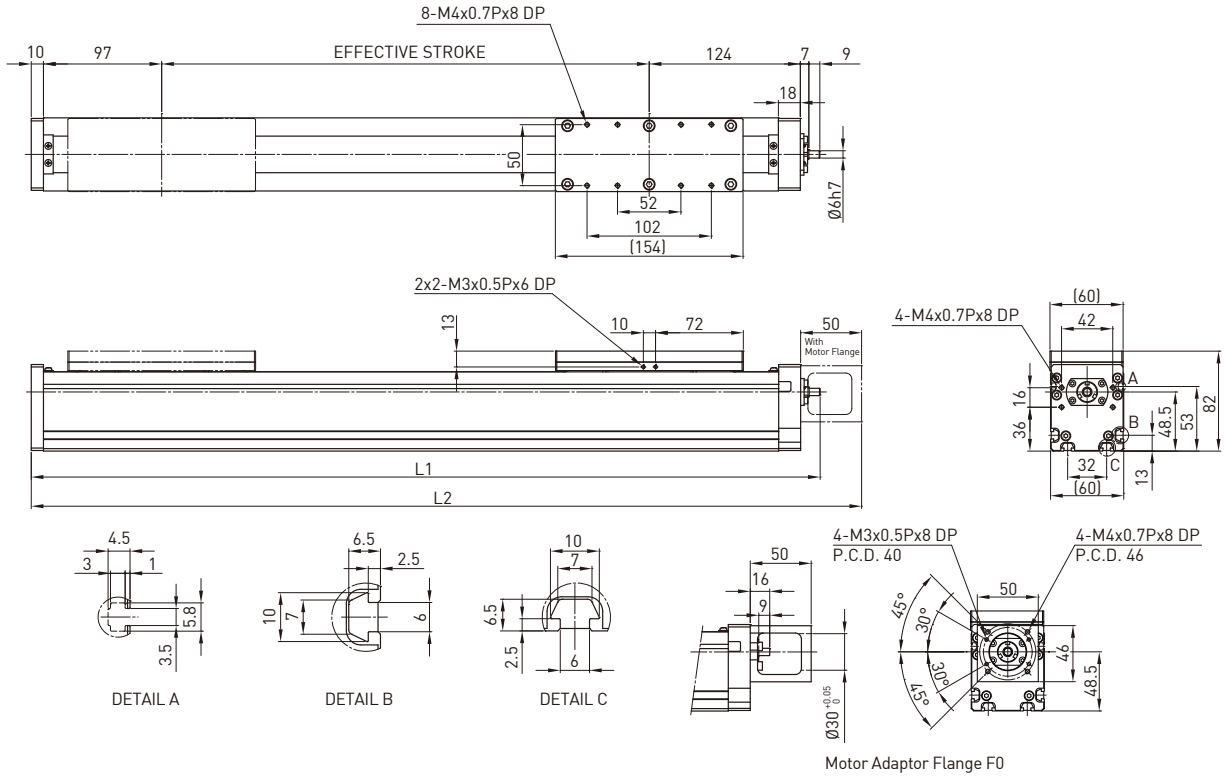

Effective Stroke (mm)	L1	L2	Weight (kg)
50	297	331	1
100	347	381	1.5
150	397	431	2
200	447	481	2.5
250	497	531	3
300	547	581	3.5
350	597	631	4
400	647	681	4.5
450	697	731	5
500	747	781	5.5
550	797	831	6
600	847	881	6.5

AC motor output		W	100	
Drive			Ballscrew C7(normal)	
Lead		mm	5	10
Rated RPM		RPM	3000	3000
Max linear speed*		mm/sec	250	500
Rated thrust		N	280	140
Repeatability		mm	±0.02	
Effective stroke		mm	50~600	
Max load (H)		kg	30	20
Rated dynamic load**	Fyd	N	50	50
	Fzd	N	300	200
	Mxd	N-m	10	10.5
	Myd	N-m	8	9
	Mzd	N-m	8	9
Permitted load condition***	$\frac{Fy}{Fyd}+\frac{Fz}{Fzd}+\frac{Mx}{Mxd}+\frac{My}{Myd}+\frac{Mz}{Mzd}\leq 1$ Fy、Fz、Mx、My、Mz are working loads			

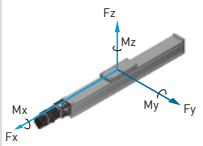

* Vibration might occur when the effective stroke is longer than 500mm.
The maximum speed should be decreased by 15% for every 100mm of increased stroke.
**The load condition is based on 10,000km operation.
*** If used in a special condition, please contact HIWIN.

Model Number for KU080

KU080	-10	P	-1100	A	F0	S1	M201
Model	Lead	Precision Grade	Effective Stroke	Slider Type	Motor Flange	Limit Switch	Motor
	5 mm 10 mm 20 mm	C: Normal P: Precision		A: Standard	F0: 200W F: Without Flange	S1: OMRON SX671 S2: OMRON SX674 S3: Panasonic GX-F12A S4: Panasonic GX-F12A-P None: No Limit Switch	M20□, K20□ M40□, K40□ Motor specification: ref. catalof P.167 M:customer specified None:Without Motor

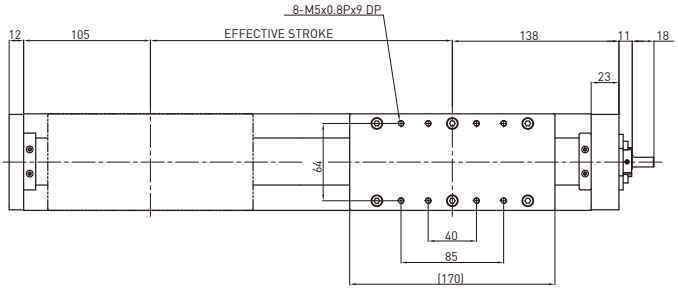

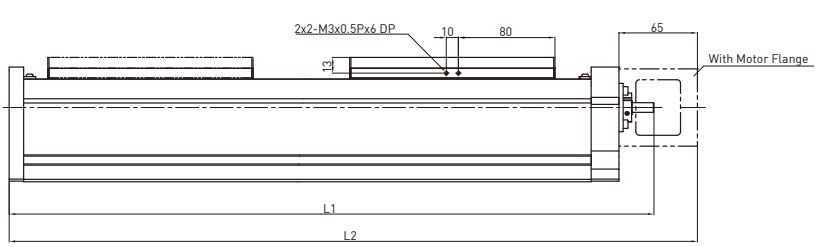

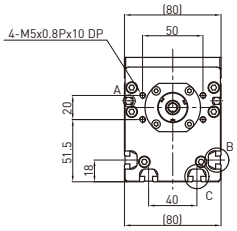

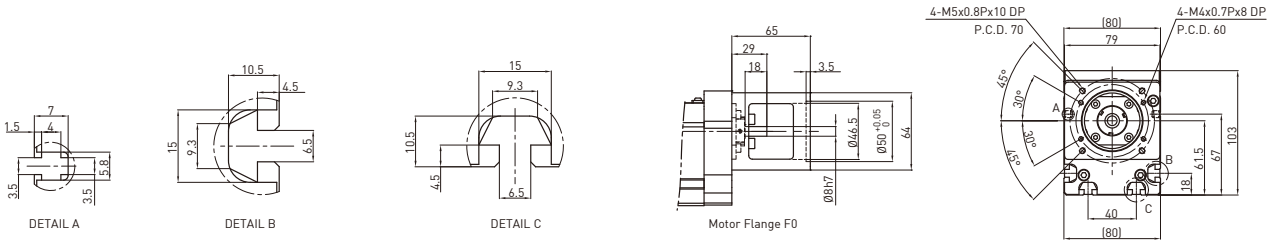

Effective Stroke (mm)	L1	L2	Weight (kg)
100	384	420	7.04
150	434	470	7.48
200	484	520	7.92
250	534	570	8.36
300	584	620	8.8
350	634	670	9.24
400	684	720	9.68
450	734	770	10.12
500	784	820	10.56
550	834	870	11.0
600	884	920	11.44
650	934	970	11.88
700	984	1020	12.32
750	1034	1070	12.76
800	1084	1120	13.2
850	1134	1170	13.64
900	1184	1220	14.08
950	1234	1270	14.52
1000	1284	1320	14.96
1050	1334	1370	15.4
1100	1384	1420	15.84

AC motor output		W	200		
Drive			Ballscrew C7(normal)		
Lead		mm	5	10	20
Rated RPM		RPM	3000	3000	3000
Max linear speed*		mm/sec	250	500	1000
Rated thrust		N	560	280	140
Repeatability		mm	±0.02		
Effective stroke		mm	100~1100		
Max load (H)		kg	60	40	20
Rated dynamic load**	Fyd	N	50	50	50
	Fzd	N	600	400	200
	Mxd	N-m	11	12.5	14
	Myd	N-m	9	10	11
	Mzd	N-m	9	10	11
Permitted load condition***	$\frac{Fy}{Fyd}+\frac{Fz}{Fzd}+\frac{Mx}{Mxd}+\frac{My}{Myd}+\frac{Mz}{Mzd}\leq 1$ Fy、Fz、Mx、My、Mz are working loads				

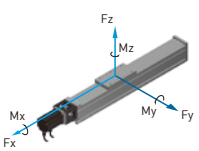

* Vibration might occur when the effective stroke is longer than 550mm.
The maximum speed should be decreased by 15% for every 100mm of increased stroke.
**The load condition is based on 10,000km operation.
***If used in a special condition, please contact HIWIN.

7.5 Motor Adaptor Flange List

KU60

Motor Adaptor Flange F0

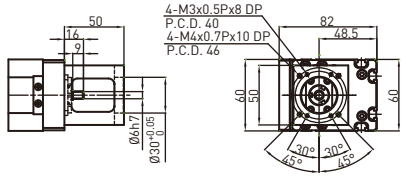

Motor Adaptor Flange F1

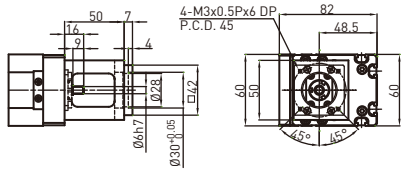

KU80

Motor Adaptor Flange F0

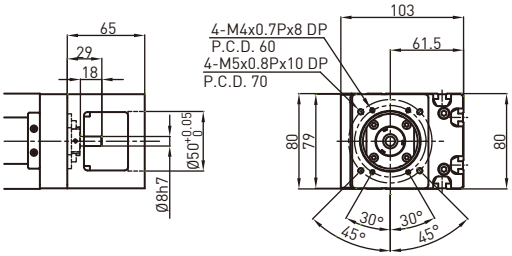

Motor Adaptor Flange F3

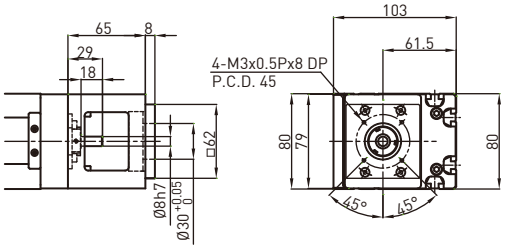

Motor Adaptor Flange F1

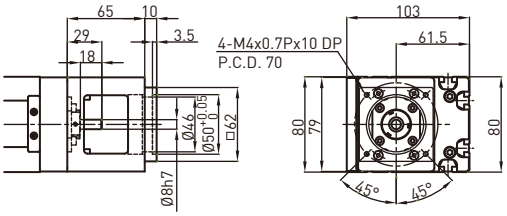

Motor Adaptor Flange F5

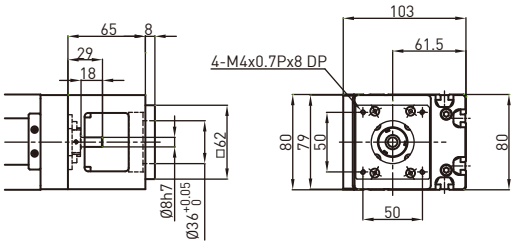

Motor Adaptor Flange F2

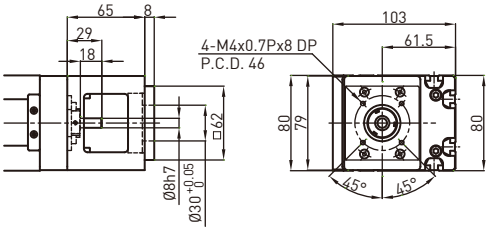

Motor Adaptor Flange F6

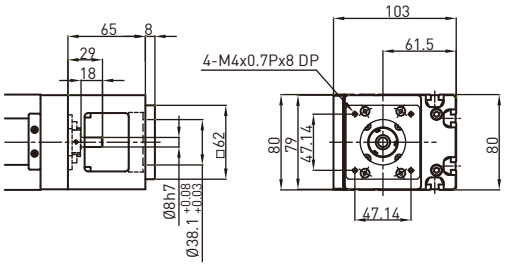

7.6 Motor Housing and Motor Adaptor Flange(KU Series)

HIWIN Mikrosystem Servo Motor

Motor Output	Motor	Flange Selection		Drive	Remarks
		KU60	KU80		
50W	FRLS052□□A4□	F1	F3	D2T-0123-S-A□	220V
100W	FRLS102□□A4□	F1	F3		220V
200W	FRLS202□□06□	-	F0	D2T-0423-S-B□	220V
400W	FRLS402□□06□	-	F0		220V
750W	FRMS752□□08□	-	-	D2T-1023-S-C□	220V

Mitsubishi Servo Motor

Motor Output	Motor	Flange Selection		Drive	Remarks
		KU60	KU80		
50W	HF-KP053	F0	F2	MR-J3S-10A	220V
100W	HF-KP13	F0	F2	MR-J3S-10A	220V
200W	HF-KP23	-	F0	MR-J3S-20A	220V
400W	HF-KP43	-	F0	MR-J3S-40A	220V
750W	HF-KP73	-	-	MR-J3S-70A	220V

Panasonic Servo Motor

Motor Output	Motor	Flange Selection		Drive	Remarks
		KU60	KU80		
50W	MSMD5AZP1	F1	F3	MADDT1105	110V
50W	MSMD5AZP1	F1	F3	MADDT1205	220V
100W	MSMD011P1	F1	F3	MADDT1107	110V
100W	MSMD012P1	F1	F3	MADDT1205	220V
200W	MSMD021P1	-	F1	MADDT2110	110V
200W	MSMD022P1	-	F1	MADDT1207	220V
400W	MSMD041P1	-	F1	MADDT3120	110V
400W	MSMD042P1	-	F1	MADDT2210	220V
750W	MSMD082S1	-	-	MADDT3520	220V

Yasukawa Servo Motor

Motor Output	Motor	Flange Selection		Drive	Remarks
		KU60	KU80		
50W	SGMAV-A5ADA61	F0	F2	SGDV-R70A01A	with key
50W	SGMAV-A5ADA2C	F0	F2	SGDV-R70A01A	no key
50W	SGMAV-A5ADA21	F0	F2	SGDV-R70A01A	no key
100W	SGMAV-01ADA21	F0	F2	SGDV-R90A01A	
200W	SGMAV-02ADA21	-	F0	SGDV-1R6A01A	
400W	SGMAV-04ADA21	-	F0	SGDV-2R8A01A	
750W	SGMAV-08ADA21	-	-	SGDV-5R5A01A	

Oriental Step Motor

Series	Model	Flange Selection		Drive	Remarks
		KU60	KU80		
CSK 2 phase	CSK243-AP	-	-		
	CSK244-AP	-	-		
	CSK245-AP	-	-		
	CSK264-AP	-	F6		
	CSK266-AP	-	F6		
	CSK268-AP	-	F6		
	CSK296-AP	-	-		
	CSK299-AP	-	-		
	CSK2913-AP	-	-		
CFKII 5 phase micro stepping	CFK543AP2	-	-		
	CFK544AP2	-	-		
	CFK545AP2	-	-		
	CFK564AP2	-	F5		
	CFK566AP2	-	F5		
	CFK569AP2	-	F5		
	CFK566HAP2	-	F5		
	CKF569HAP2	-	F5		
	CFK596HAP2	-	-		
	CFK599HAP2	-	-		
	CFK5913HAP2	-	-		
UMK 2 phase	UMK243A	-	-		
	UMK244A	-	-		
	UMK245A	-	-		
	UMK264A	-	F6		
	UMK266A	-	F6		
	UMK268A	-	F6		
RK 5 phase	RK543AA	-	-		
	RK544AA	-	-		
	RK545AA	-	-		
	RK566AA	-	F5		
	RK569AA	-	F5		
	RK596AA	-	-		
	RK599AA	-	-		
	RK5913AA	-	-		

Single-Axis Robot
8. KE Series

8.1 Features

◎ Lightweight aluminum base
◎ Dustproof design
◎ High accuracy, high efficiency, high reliability

8.2 Applications

◎ Precision industry & semiconductor
◎ Inspection, testing & assembly equipment
◎ Optical & medical equipment

8.3 KE Series

Model Number for KE030

KE030	-1	C	-300	A	F0	S1	M
Model	Lead	Precision Grade	Effective Stroke	Slider Type	Motor Flange	Limit Switch	Motor
	1 mm	C: Normal P: Precision		A: Standard	F0 : Direct	S1: OMRON SX671 S2: OMRON SX674 S3: Panasonic GX-F12A S4: Panasonic GX-F12A-P None: No Limit Switch	M:customer specified None:Without Motor

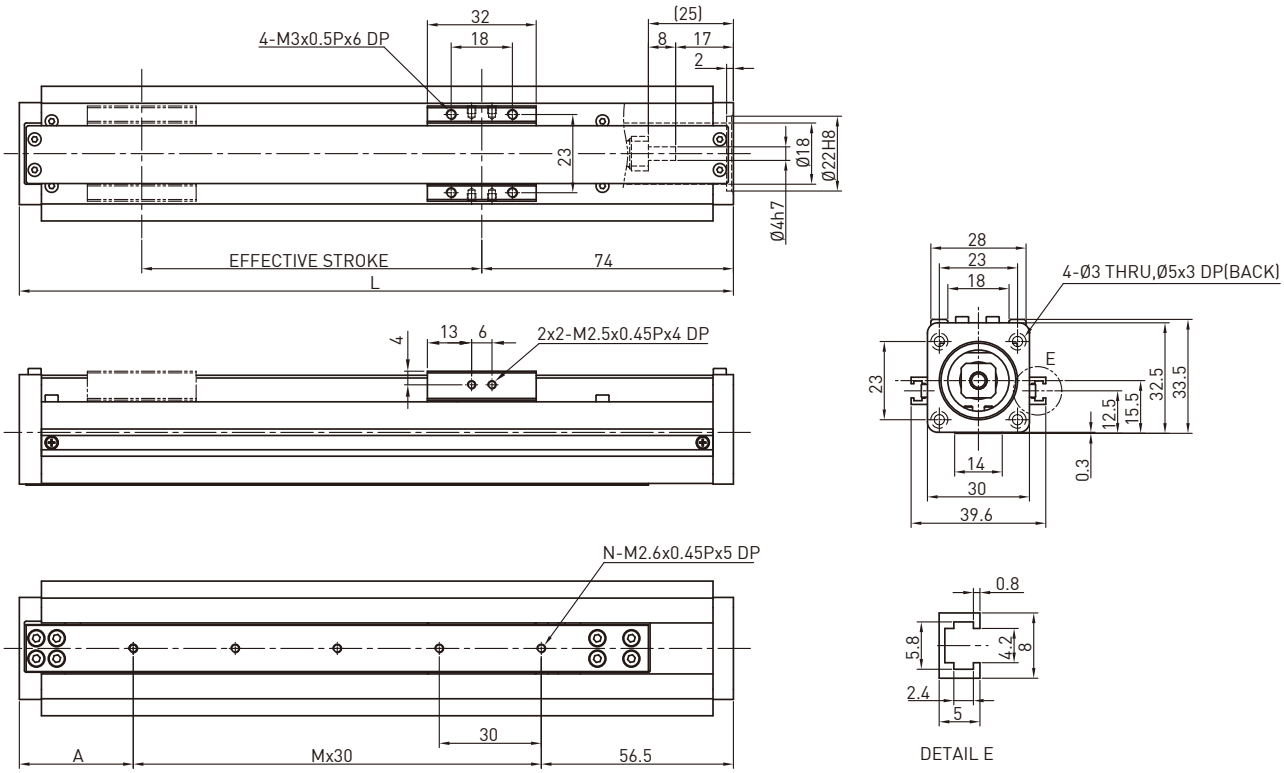

Effective stroke (mm)	L	A	M	N	Weight (kg)
50	160	43.5	2	3	0.2
100	210	33.5	4	5	0.5
150	260	23.5	6	7	0.8
200	310	43.5	7	8	1.1
250	360	33.5	9	10	1.4
300	410	53.5	10	11	1.9

AC motor output		W	28 stepping motor
Rated RPM		RPM	-
Lead		mm	1.25
Max linear speed		mm/sec	62.5
Rated thrust		N	175
Repeatability		mm	±0.02
Effective stroke		mm	50-300
Max load (H)		kg	3
Rated dynamic load*	Fyd	N	4
	Fzd	N	30
	Mxd	N-m	0.2
	Myd	N-m	0.1
	Mzd	N-m	0.1
Permitted load condition**	$\frac{Fy}{Fyd}+\frac{Fz}{Fzd}+\frac{Mx}{Mxd}+\frac{My}{Myd}+\frac{Mz}{Mzd}\leq 1$ Fy, Fz, Mx, My, Mz Mz are working loads		

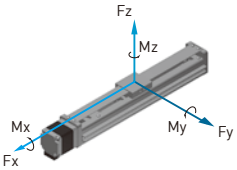

* The load condition is based on 10,000km operation.
** If used on the vertical axis or in a special condition, please contact HIWIN.

Model Number for KE040

KE040	-10	C	-300	A	F0	S1	M051
Model	Lead	Precision Grade	Effective Stroke	Slider Type	Motor Flange	Limit Switch	Motor
	2 mm 5 mm	C: Normal P: Precision		A: Standard	F0 : Direct	S1: OMRON SX671 S2: OMRON SX674 S3: Panasonic GX-F12A S4: Panasonic GX-F12A-P None: No Limit Switch	M05□, K05□ M10□, K10□ Motor specification: ref. catalof P.167 M:customer specified None:Without Motor

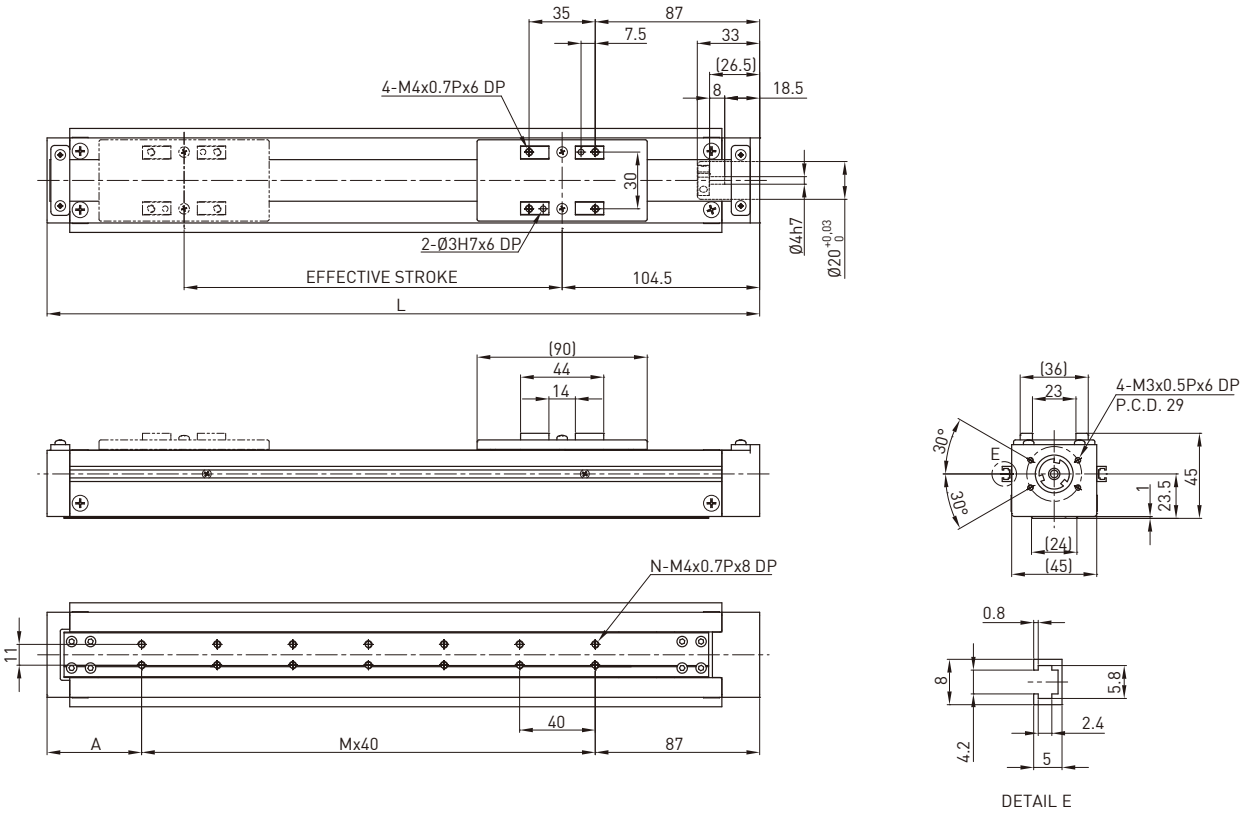

Effective stroke (mm)	L	A	M	N	Weight (kg)
50	227	60	2	6	1
100	277	70	3	8	1.3
150	327	40	5	12	1.6
200	377	50	6	14	1.9
250	427	60	7	16	2.2
300	477	70	8	18	2.5

AC motor output		W	50	
Rated RPM		RPM	3000	3000
Lead		mm	2	5
Max linear speed		mm/sec	100	250
Rated thrust		N	280	140
Repeatability		mm	±0.02	
Effective stroke		mm	50~300	
Max load (H)		kg	6	4
Rated dynamic load*	Fyd	N	10	10
	Fzd	N	60	30
	Mxd	N-m	1	1
	Myd	N-m	0.55	0.6
	Mzd	N-m	0.55	0.5
Permitted load condition**	$\frac{Fy}{Fyd}+\frac{Fz}{Fzd}+\frac{Mx}{Mxd}+\frac{My}{Myd}+\frac{Mz}{Mzd}\leq 1$ Fy, Fz, Mx, My, Mz Mz are working loads			

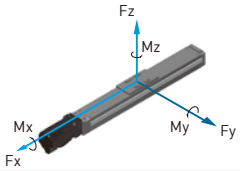

* The load condition is based on 10,000km operation.
** If used on the vertical axis or in a special condition, please contact HIWIN.

Model Number for KE050 (Single Slider)

KE050	-04	C	-400	A	F0	S2	M051
Model	Lead	Precision Grade	Effective Stroke	Slider Type	Motor Flange	Limit Switch	Motor
	4 mm	C: Normal		A: Standard	F0:Direct	S1: OMRON SX671 S2: OMRON SX674 S3: Panasonic GX-F12A S4: Panasonic GX-F12A-P None: No Limit Switch	M05□, K05□ M10□, K10□ Motor specification: ref. catalof P.167 M:customer specified None:Without Motor

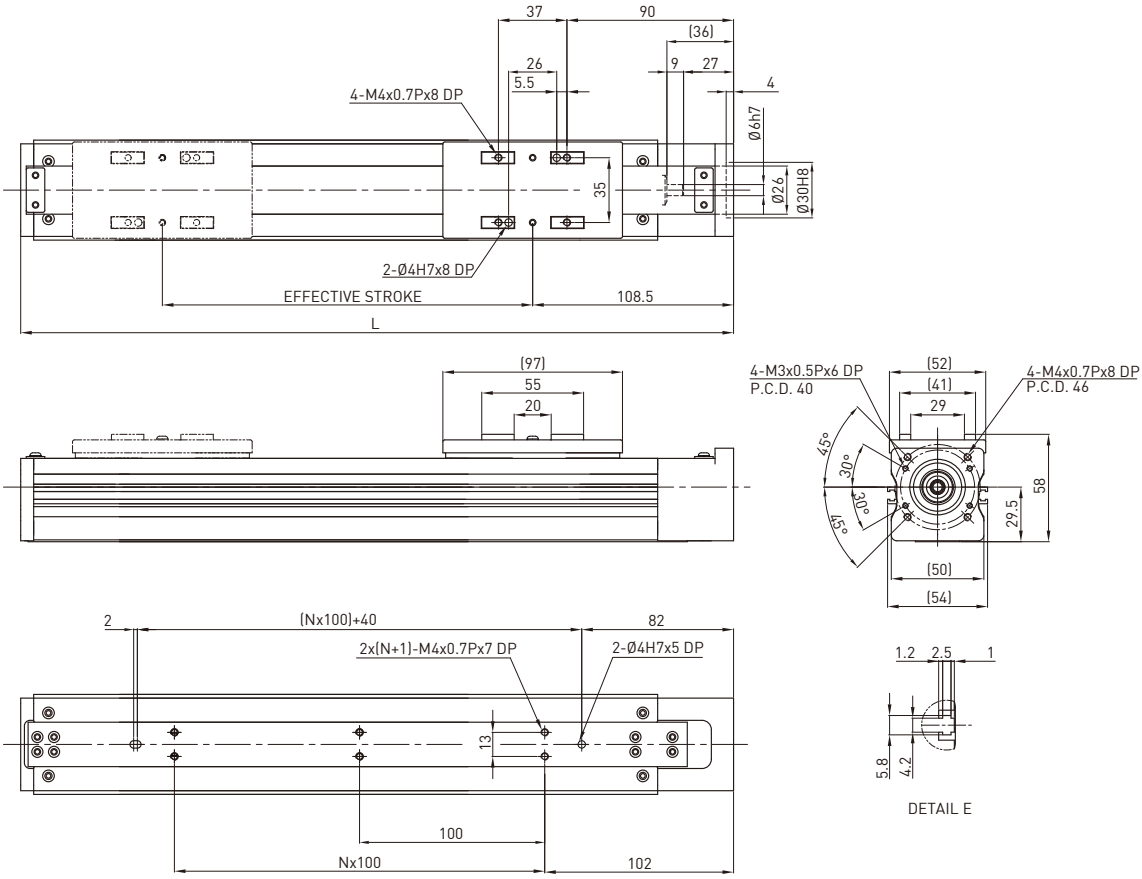

Effective stroke (mm)	L	N	Weight (kg)
100	285	1	1.4
200	385	2	1.7
300	485	3	2
400	585	4	2.3

AC motor output		W	50
Rated RPM		RPM	3000
Lead		mm	4
Max linear speed		mm/sec	200
Rated thrust		N	175
Repeatability		mm	±0.02
Effective stroke		mm	100~400
Max load (H)		kg	8
Rated dynamic load*	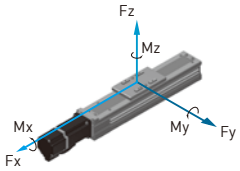	Fyd	N	10
		Fzd	N	80
		Mxd	N-m	1.5
		Myd	N-m	0.8
		Mzd	N-m	0.8
Permitted load condition**	$\frac{Fy}{Fyd}+\frac{Fz}{Fzd}+\frac{Mx}{Mxd}+\frac{My}{Myd}+\frac{Mz}{Mzd}\leq 1$ Fy, Fz, Mx, My, Mz are working loads		

* The load condition is based on 10,000km operation.
** If used on the vertical axis or in a special condition, please contact HIWIN.

Model Number for KE050 (Double Slider)

KE050	D	-04	C	-250	A	F0	S2	M051
Model	Double Slider	Lead	Precision Grade	Effective Stroke	Slider Type	Motor Flange	Limit Switch	Motor
		4mm	C: Normal		A: Standard	F0 :Direct	S2: OMRON SX674 None: No Limit Switch	M05□, K05□ M10□, K10□ Motor specification: ref. catalof P.167 M:customer specified None:Without Motor

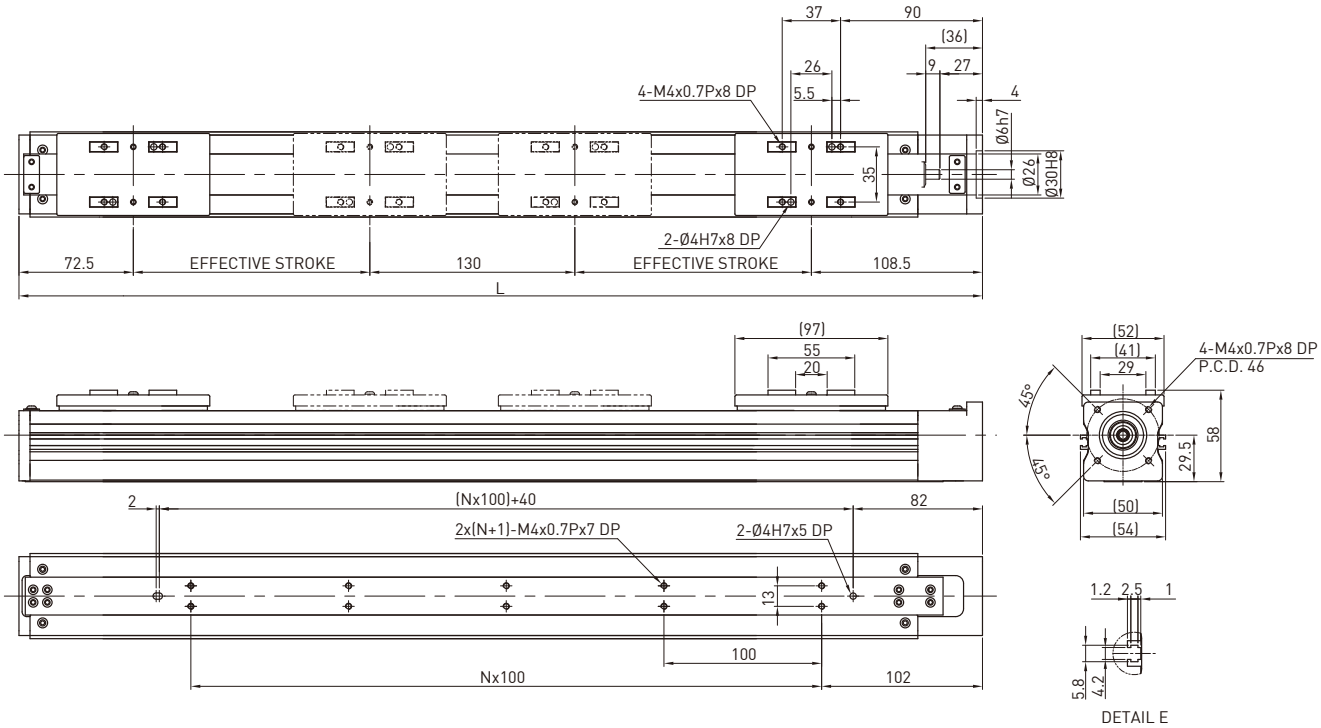

Effective stroke (mm)	L	N	Weight (kg)
100	511	3	2.3
150	611	4	2.5
200	711	5	2.8
250	811	6	3.0

AC motor output		W	50
Rated RPM		RPM	3000
Lead		mm	4
Max linear speed		mm/sec	200
Rated thrust		N	175
Repeatability		mm	±0.02
Effective stroke		mm	100~400
Max load (H)		kg	8
Rated dynamic load*	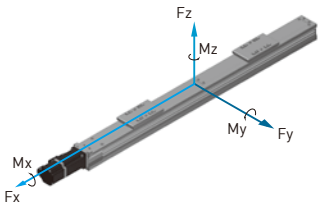	Fyd	N	10
		Fzd	N	80
		Mxd	N-m	1.5
		Myd	N-m	0.8
		Mzd	N-m	0.8
Permitted load condition**	$\frac{Fy}{Fyd}+\frac{Fz}{Fzd}+\frac{Mx}{Mxd}+\frac{My}{Myd}+\frac{Mz}{Mzd}\leq 1$ Fy, Fz, Mx, My, Mz are working loads		

* The load condition is based on 10,000km operation.
** If used on the vertical axis or in a special condition, please contact HIWIN.

Model Number for KE065

KE065	-10	C	-600	A	F0	S1	M101
Model	Lead	Accuracy Grade	Effective Stroke	Slider Type	Flange F0	Limit Switch	Motor
	5 mm 10 mm	C: Normal P: Precision		A: Standard	F0: 100W	S1: OMRON SX671 S2: OMRON SX674 S3: Panasonic GX-F12A S4: Panasonic GX-F12A-P None: No Limit Switch	M05□, K05□ M10□, K10□ Motor specification: ref. catalof P.167 M:customer specified None:Without Motor

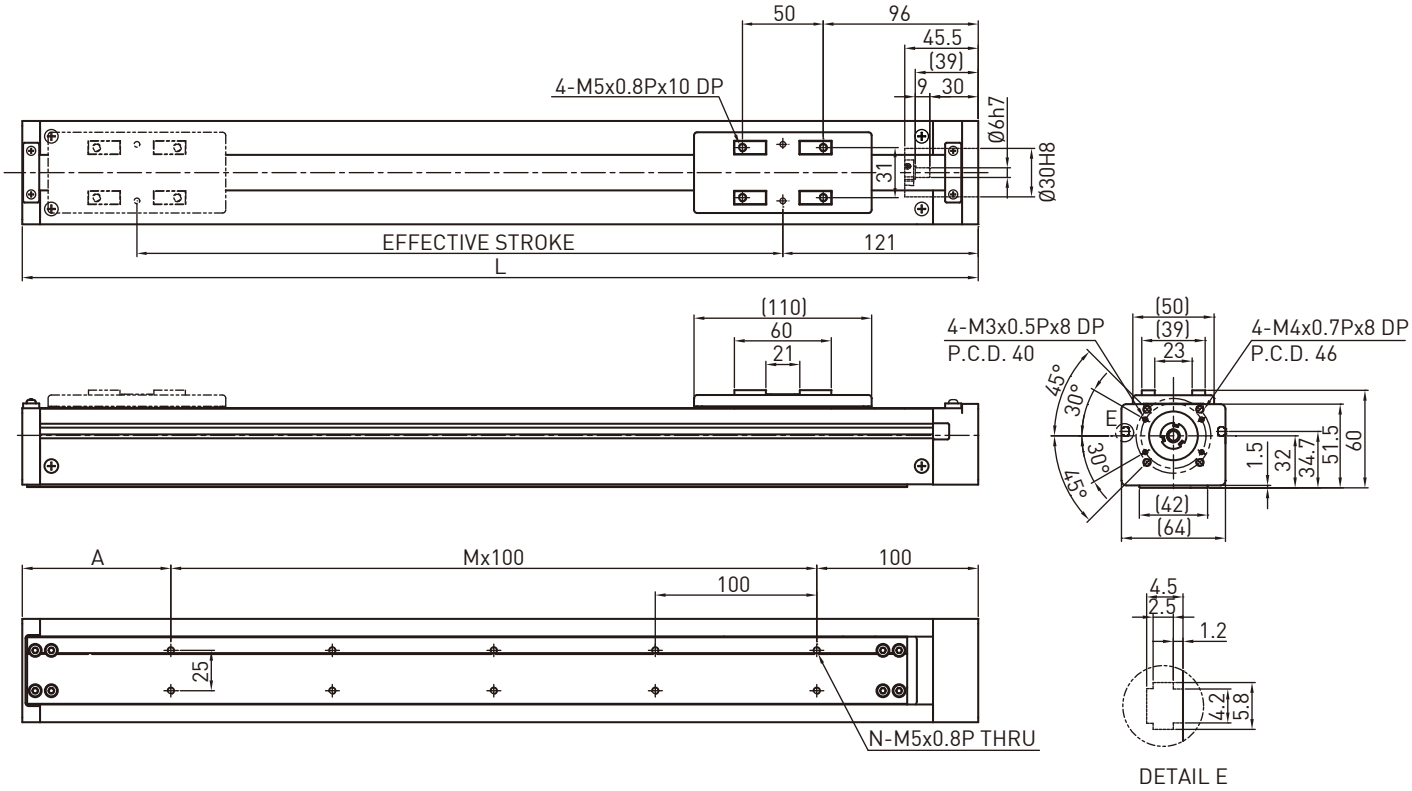

Effective stroke (mm)	L	A	M	N	Weight (kg)
50	242	42	1	4	2.5
100	292	92	1	4	2.8
150	342	42	2	6	3.1
200	392	92	2	6	3.4
250	442	42	3	8	3.7
300	492	92	3	8	4
350	542	42	4	10	4.3
400	592	92	4	10	4.6
450	642	42	5	12	4.9
500	692	92	5	12	5.2
550	742	42	6	14	5.5
600	792	92	6	14	5.8

AC motor output		W	100	
Rated RPM		RPM	3000	3000
Lead		mm	5	10
Max linear speed*		mm/sec	250	500
Rated thrust		N	280	140
Repeatability		mm	±0.02	
Effective stroke		mm	50~600	
Max load (H)		kg	15	8
Rated dynamic load**	Fyd	N	10	10
	Fzd	N	150	80
	Mxd	N-m	4.4	4.7
	Myd	N-m	2.3	2.6
	Mzd	N-m	2.3	2.6
Permitted load condition***	$\frac{Fy}{Fyd}+\frac{Fz}{Fzd}+\frac{Mx}{Mxd}+\frac{My}{Myd}+\frac{Mz}{Mzd}\leq 1$ Fy, Fz, Mx, My, Mz Mz are working loads			

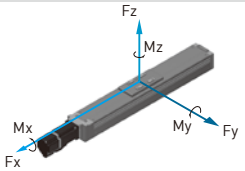

* Vibration might occur when the effective stroke is longer than 550mm.
The maximum speed should be decreased by 15% for every 100mm of increased stroke.
**The load condition is based on 10,000km operation.
***If used on vertical axis or special condition , please contact HIWIN.

Model Number for KE070

KE070	-10	C	-600	A	F0	S1	M101
Model	Lead	Accuracy Grade	Effective Stroke	Slider Type	Flange F0	Limit Switch	Motor
	5 mm 10 mm	C: Normal P: Precision		A: Standard	F0: Direct	S1: OMRON SX671 S2: OMRON SX674 S3: Panasonic GX-F12A S4: Panasonic GX-F12A-P None: No Limit Switch	M05□, K05□ M10□, K10□ Motor specification: ref. catalof P.167 M:customer specified None:Without Motor

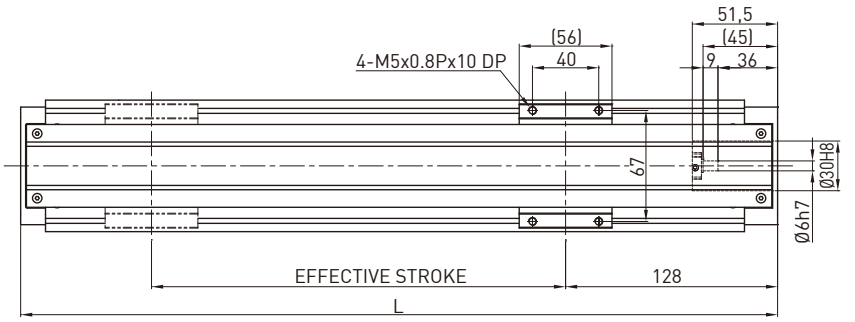

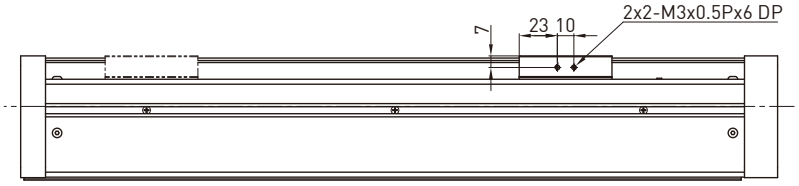

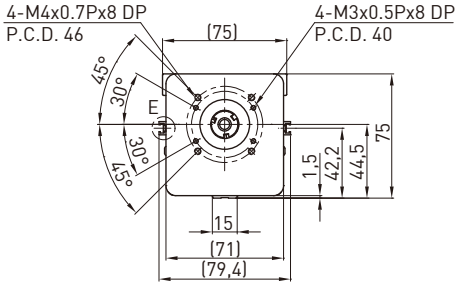

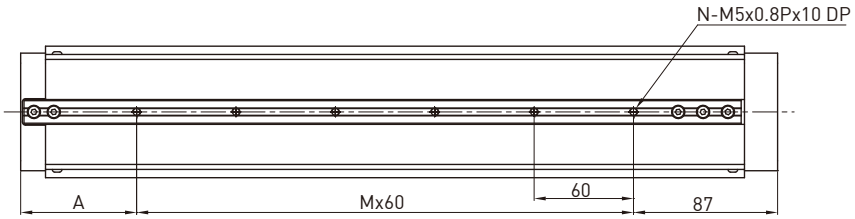

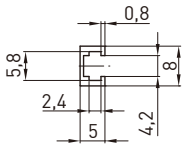

DETAIL E

Effective stroke (mm)	L	A	M	N	Weight (kg)
50	257	50	2	3	2.8
100	307	40	3	4	3.1
150	357	90	3	4	3.4
200	407	80	4	5	3.7
250	457	70	5	6	4
300	507	60	6	7	4.3
350	557	50	7	8	4.6
400	607	40	8	9	4.9
450	657	90	8	9	5.2
500	707	80	9	10	5.5
550	757	70	10	11	5.8
600	807	60	11	12	6.1

AC motor output		W	100	
Rated RPM		RPM	3000	3000
Lead		mm	5	10
Max linear speed*		mm/sec	250	500
Rated thrust		N	280	140
Repeatability		mm	±0.02	
Effective stroke		mm	50~600	
Max load (H)		kg	20	15
Rated dynamic load**	Fyd	N	10	10
	Fzd	N	200	150
	Mxd	N-m	3.5	3.5
	Myd	N-m	2	2.1
	Mzd	N-m	2	2.1
Permitted load condition***	$\frac{Fy}{Fyd}+\frac{Fz}{Fzd}+\frac{Mx}{Mxd}+\frac{My}{Myd}+\frac{Mz}{Mzd}\leq 1$ Fy, Fz, Mx, My, Mz Mz are working loads			

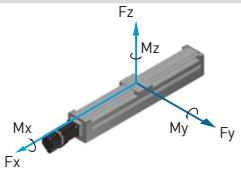

* Vibration might occur when the effective stroke is longer than 550mm.
The maximum speed should be decreased by 15% for every 100mm of increased stroke.
**The load condition is based on 10,000km operation.
***If used on vertical axis or special condition , please contact HIWIN.

Model Number for KE090

KE090	-10	C	-600	A	F0	S1	M201
Model	Lead	Accuracy Grade	Effective Stroke	Slider Type	Flange F0	Limit Switch	Motor
	5 mm 10 mm	C: Normal P: Precision		A: Standard	F0: Direct	S1: OMRON SX671 S2: OMRON SX674 S3: Panasonic GX-F12A S4: Panasonic GX-F12A-P None: No Limit Switch	M20□, K20□ M40□, K40□ Motor specification: ref. catalof P.167 M:customer specified None:Without Motor

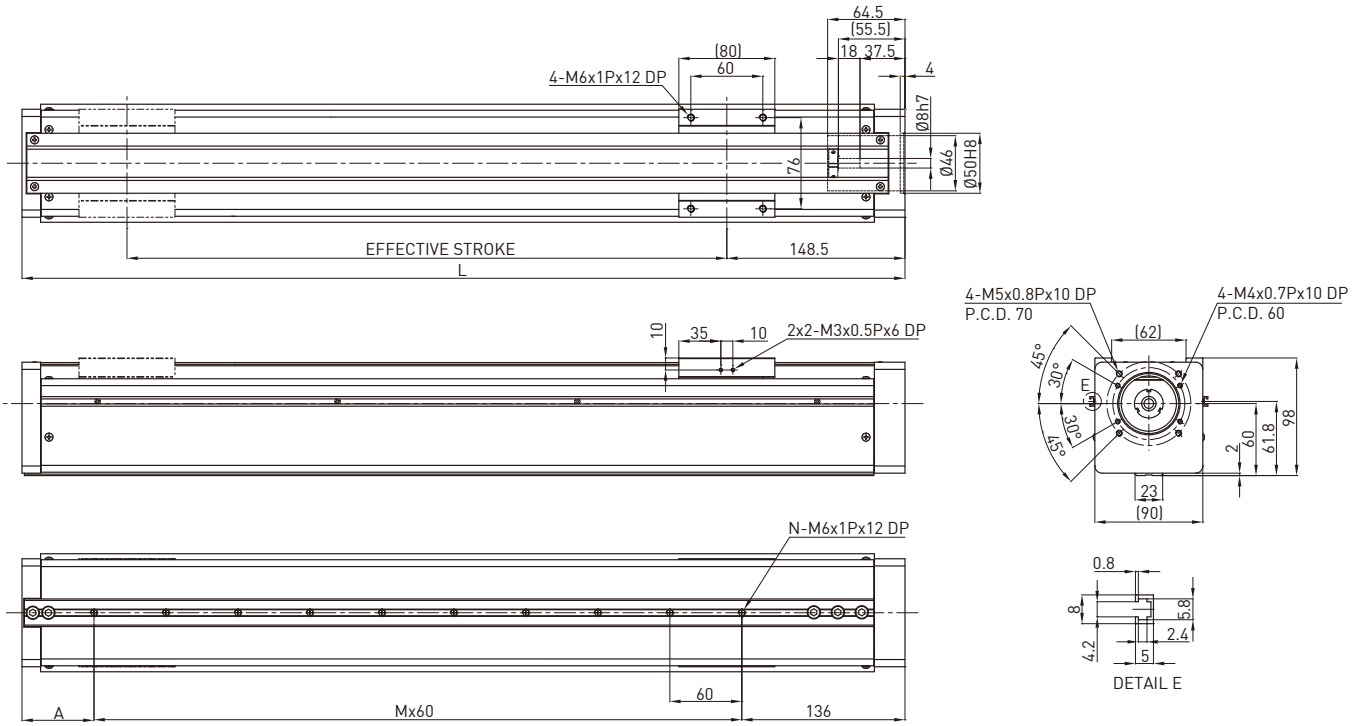

Effective stroke (mm)	L	A	M	N	Weight (kg)
50	286	90	1	2	6.7
100	336	80	2	3	7
150	386	70	3	4	7.3
200	436	60	4	5	7.6
250	486	50	5	6	7.9
300	536	40	6	7	8.2
350	586	90	6	7	8.5
400	636	80	7	8	8.8
450	686	70	8	9	9.1
500	736	60	9	10	9.4
550	786	50	10	11	9.7
600	836	40	11	12	10

AC motor output		W	200	
Rated RPM		RPM	3000	3000
Lead		mm	5	10
Max linear speed		mm/sec	250	500
Rated thrust		N	560	280
Repeatability		mm	±0.02	
Effective stroke		mm	50~600	
Max load (H)		kg	25	23
Rated dynamic load*	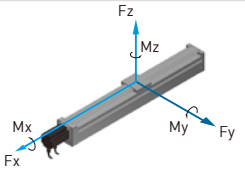			
	Fyd	N	10	10
	Fzd	N	250	230
	Mxd	N-m	13	12
	Myd	N-m	7.1	7.3
	Mzd	N-m	7.1	7.3
Permitted load condition**	$\frac{Fy}{Fyd}+\frac{Fz}{Fzd}+\frac{Mx}{Mxd}+\frac{My}{Myd}+\frac{Mz}{Mzd}\leq 1$ Fy, Fz, Mx, My, Mz Mz are working loads			

*The load condition is based on 10,000km operation.
**If used on vertical axis or special condition , please contact HIWIN.

8.4 Motor Adaptor Flange List

KE30

Motor Adaptor Flange F0

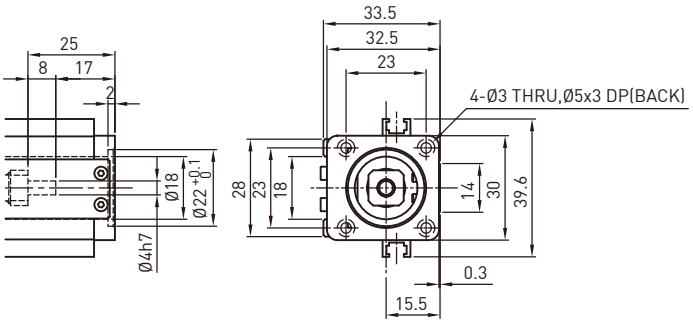

KE40

Motor Adaptor Flange F0

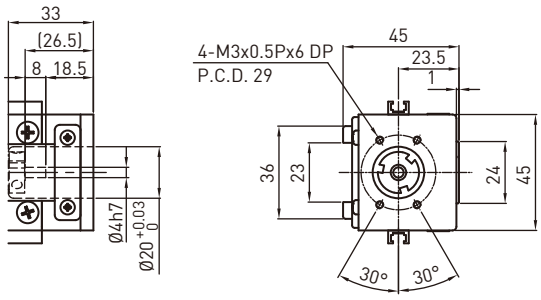

Motor Adaptor Flange F1

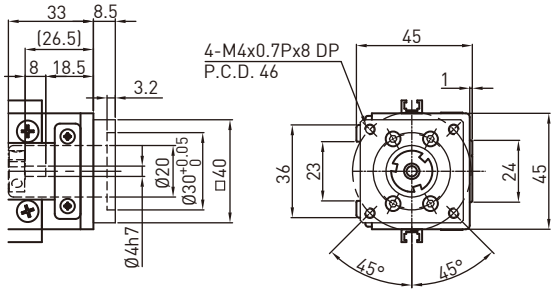

Motor Adaptor Flange F2

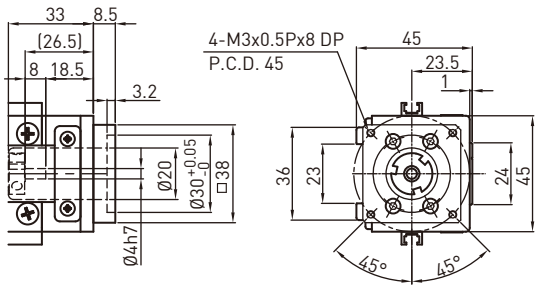

KE50

Motor Adaptor Flange F0

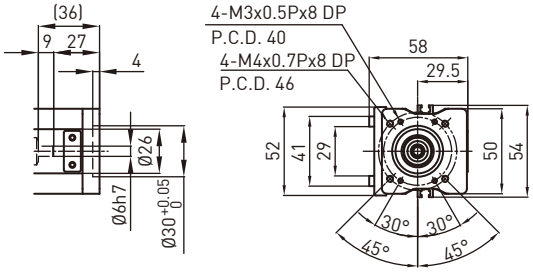

Motor Adaptor Flange F1

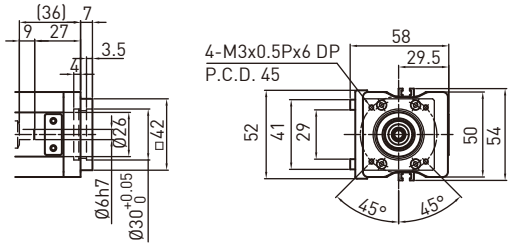

KE65

Motor Adaptor Flange F0

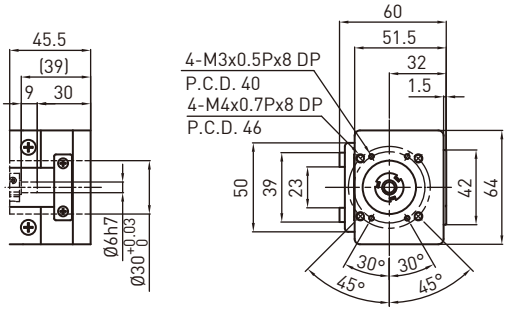

Motor Adaptor Flange F1

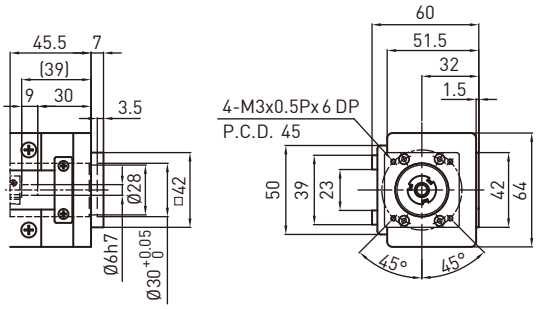

KE70

Motor Adaptor Flange F0

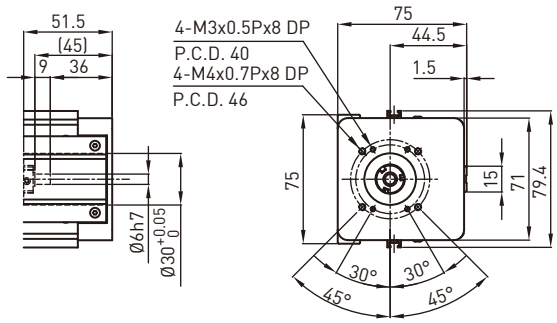

Motor Adaptor Flange F1

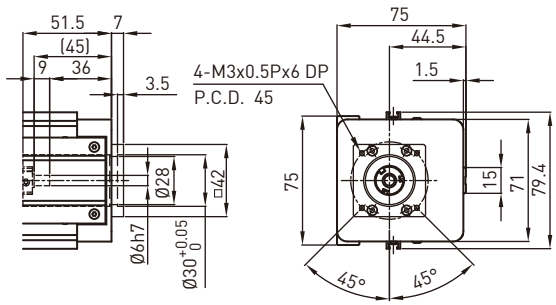

KE90

Motor Adaptor Flange F0

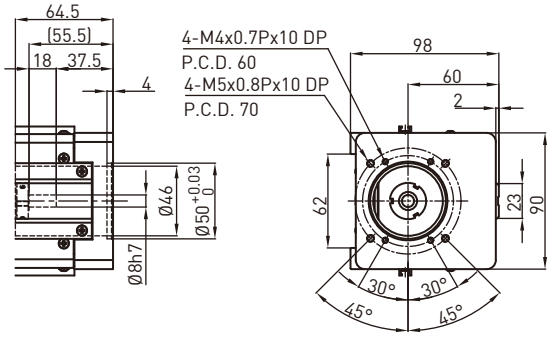

Motor Adaptor Flange F3

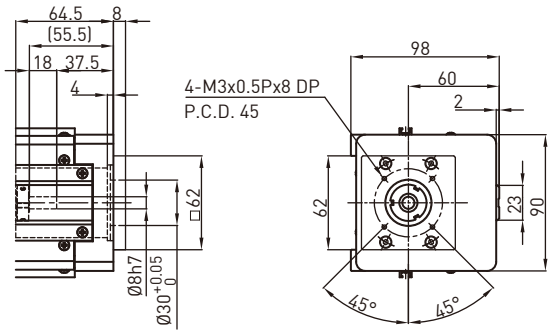

Motor Adaptor Flange F1

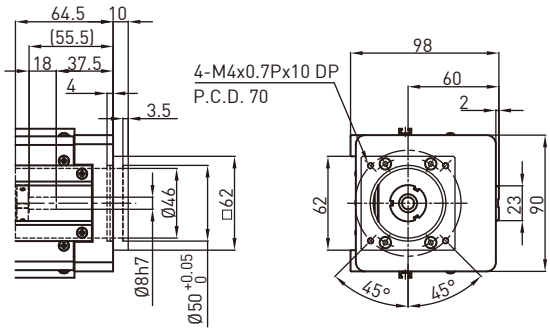

Motor Adaptor Flange F5

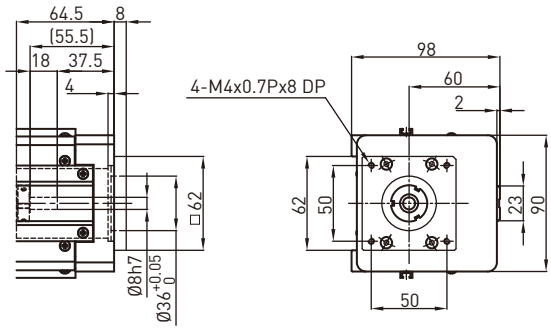

Motor Adaptor Flange F2

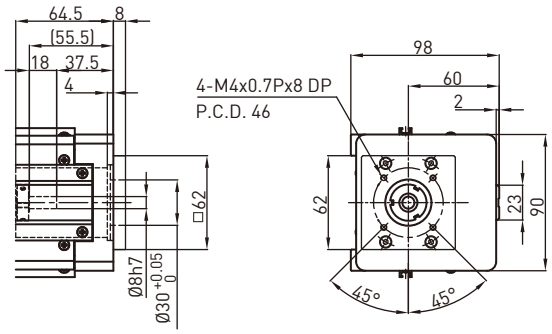

Motor Adaptor Flange F6

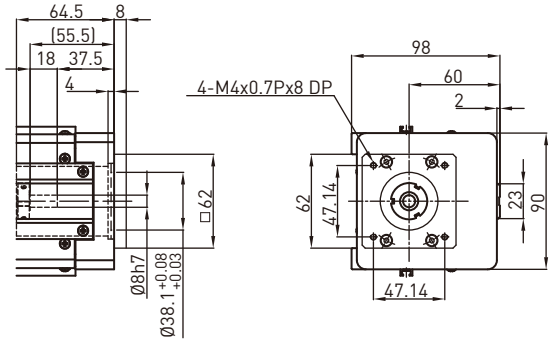

8.5 Motor Housing and Motor Adaptor Flange(KE Series)

HIWIN Mikrosystem Servo Motor

Motor Output	Motor	Flange Selection						Drive	Remarks
		KE30	KE40	KE50	KE65	KE70	KE90		
50W	FRLS052□□A4□	-	F2	F1	F1	F1	F3	D2T-0123-S-A□	220V
100W	FRLS102□□A4□	-	F2	F1	F1	F1	F3		220V
200W	FRLS202□□06□	-	-	-	-	-	F0	D2T-0423-S-B□	220V
400W	FRLS402□□06□	-	-	-	-	-	F0		220V
750W	FRMS752□□08□	-	-	-	-	-	-	D2T-1023-S-C□	220V

Mitsubishi Servo Motor

Motor Output	Motor	Flange Selection						Drive	Remarks
		KE30	KE40	KE50	KE65	KE70	KE90		
50W	HF-KP053	-	F1	F0	F0	F0	F2	MR-J3S-10A	220V
100W	HF-KP13	-	F1	F0	F0	F0	F2	MR-J3S-10A	220V
200W	HF-KP23	-	-	-	-	-	F0	MR-J3S-20A	220V
400W	HF-KP43	-	-	-	-	-	F0	MR-J3S-40A	220V
750W	HF-KP73	-	-	-	-	-	-	MR-J3S-70A	220V

Panasonic Servo Motor

Motor Output	Motor	Flange Selection						Drive	Remarks
		KE30	KE40	KE50	KE65	KE70	KE90		
50W	MSMD5AZP1	-	F2	F1	F1	F1	F3	MADDT1105	110V
50W	MSMD5AZP1	-	F2	F1	F1	F1	F3	MADDT1205	220V
100W	MSMD011P1	-	F2	F1	F1	F1	F3	MADDT1107	110V
100W	MSMD012P1	-	F2	F1	F1	F1	F3	MADDT1205	220V
200W	MSMD021P1	-	-	-	-	-	F1	MADDT2110	110V
200W	MSMD022P1	-	-	-	-	-	F1	MADDT1207	220V
400W	MSMD041P1	-	-	-	-	-	F1	MADDT3120	110V
400W	MSMD042P1	-	-	-	-	-	F1	MADDT2210	220V
750W	MSMD082S1	-	-	-	-	-	-	MADDT3520	220V

Yasukawa Servo Motor

Motor Output	Motor	Flange Selection						Drive	Remarks
		KE30	KE40	KE50	KE65	KE70	KE90		
50W	SGMAV-A5ADA61	-	F1	F0	F0	F0	F2	SGDV-R70A01A	with key
50W	SGMAV-A5ADA2C	-	F1	F0	F0	F0	F2	SGDV-R70A01A	no key
50W	SGMAV-A5ADA21	-	F1	F0	F0	F0	F2	SGDV-R70A01A	no key
100W	SGMAV-01ADA21	-	F1	F0	F0	F0	F2	SGDV-R90A01A	
200W	SGMAV-02ADA21	-	-	-	-	-	F0	SGDV-1R6A01A	
400W	SGMAV-04ADA21	-	-	-	-	-	F0	SGDV-2R8A01A	
750W	SGMAV-08ADA21	-	-	-	-	-	F1	SGDV-5R5A01A	

Oriental Step Motor

Series	Model	Flange Selection						Drive	Remarks
		KE30	KE40	KE50	KE65	KE70	KE90		
CSK 2 phase	CSK243-AP	-	-	-	-	-	-		
	CSK244-AP	-	-	-	-	-	-		
	CSK245-AP	-	-	-	-	-	-		
	CSK264-AP	-	-	-	-	-	F6		
	CSK266-AP	-	-	-	-	-	F6		
	CSK268-AP	-	-	-	-	-	F6		
	CSK296-AP	-	-	-	-	-	-		
	CSK299-AP	-	-	-	-	-	-		
	CSK2913-AP	-	-	-	-	-	-		
CFKII 5 phase micro stepping	CFK543AP2	-	-	-	-	-	-		
	CFK544AP2	-	-	-	-	-	-		
	CFK545AP2	-	-	-	-	-	-		
	CFK564AP2	-	-	-	-	-	F5		
	CFK566AP2	-	-	-	-	-	F5		
	CFK569AP2	-	-	-	-	-	F5		
	CFK566HAP2	-	-	-	-	-	F5		
	CKF569HAP2	-	-	-	-	-	F5		
	CFK596HAP2	-	-	-	-	-	-		
	CFK599HAP2	-	-	-	-	-	-		
	CFK5913HAP2	-	-	-	-	-	-		
UMK 2 phase	UMK243A	-	-	-	-	-	-		
	UMK244A	-	-	-	-	-	-		
	UMK245A	-	-	-	-	-	-		
	UMK264A	-	-	-	-	-	F6		
	UMK266A	-	-	-	-	-	F6		
	UMK268A	-	-	-	-	-	F6		
RK 5 phase	RK543AA	-	-	-	-	-	-		
	RK544AA	-	-	-	-	-	-		
	RK545AA	-	-	-	-	-	-		
	RK566AA	-	-	-	-	-	F5		
	RK569AA	-	-	-	-	-	F5		
	RK596AA	-	-	-	-	-	-		
	RK599AA	-	-	-	-	-	-		
	RK5913AA	-	-	-	-	-	-		

Single-Axis Robot

9. HIWIN AC Servo Motor & Drive Specification Table

Motor Specification	Motor Model	Encoder Type	Rated Output (W)	Brake Option	Drive Model	Motor Power Cable Model	Encoder Cable Model	USB Dapter Cable Model
M050	FRLS05205A4A	13 bit incremental encoder	50	Without brake	D2T-0123-S-A0	HVPS04AA03MB	HVE13IAB03MB	051700800366
M100	FRLS10205A4A		100					
M200	FRLS2020506A		200		D2T-0423-S-B0			
M400	FRLS4020506A		400					
M750	FRMS7520508A		750		D2T-1023-S-C0			
K050	FRLS052B5A4A		50	With brake	D2T-0123-S-A0	HVPS06AA03MB		
K100	FRLS102B5A4A		100					
K200	FRLS202B506A		200		D2T-0423-S-B0			
K400	FRLS402B506A		400					
K750	FRMS752B508A		750		D2T-1023-S-C0			
M051	FRLS05206A4A	17bit incremental econder (HIWIN17)	50	Without brake	D2T-0123-S-A4	HVPS04AA03MB	HVE17IAB03MB	
M101	FRLS10206A4A		100					
M201	FRLS2020606A		200		D2T-0423-S-B4			
M401	FRLS4020606A		400					
M751	FRMS7520608A		750		D2T-1023-S-C4			
K051	FRLS052B6A4A		50	With brake	D2T-0123-S-A4	HVPS06AA03MB		
K101	FRLS102B6A4A		100					
K201	FRLS202B606A		200		D2T-0423-S-B4			
K401	FRLS402B606A		400					
K751	FRMS752B608A		750		D2T-1023-S-C4			
M052	FRLS05204A4A	17bit absolute encoder	50	Without brake	D2T-0123-S-A5	HVPS04AA03MB	HVE17AAB03MB	
M102	FRLS10204A4A		100					
M202	FRLS2020406A		200		D2T-0423-S-B5			
M402	FRLS4020406A		400					
M752	FRMS7520408A		750		D2T-1023-S-C5			
K052	FRLS052B4A4A		50	With brake	D2T-0123-S-A5	HVPS06AA03MB		
K102	FRLS102B4A4A		100					
K202	FRLS202B406A		200		D2T-0423-S-B5			
K402	FRLS402B406A		400					
K752	FRMS752B408A		750		D2T-1023-S-C5			

Single-Axis Robot

10. Motor & Drive

10.1 Features

Excellent Performance

Excellent high speed response

With the help of a semiconductor high-end motion control algorithm and advanced common gain concept, a high speed response is achieved, satisfying all motion control needs.

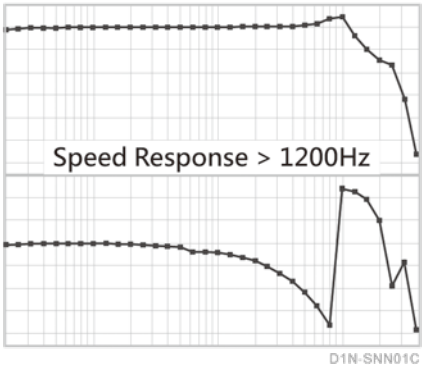

High acceleration responses

Using advanced controller design tools, and space vector current control technology, high level servo performance is achieved. AC servo motor speed can change from -3000 to +3000 rpms in as little as 0.006 seconds.

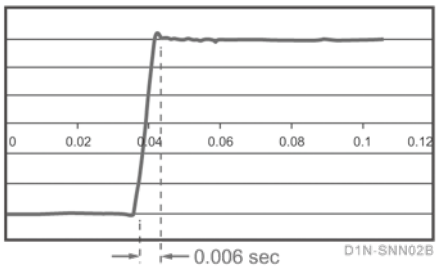

Built-in accuracy improvement feature

The D2 drive includes features to improve total positioning accuracy of the mechanical system.
The table size can be up to 5000 points. It is implemented in all control modes to optimize system behavior.

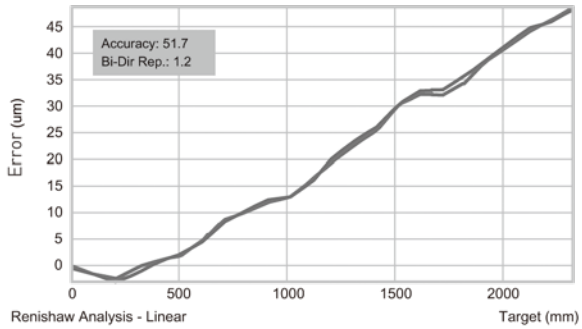

Without accuracy improvement feature

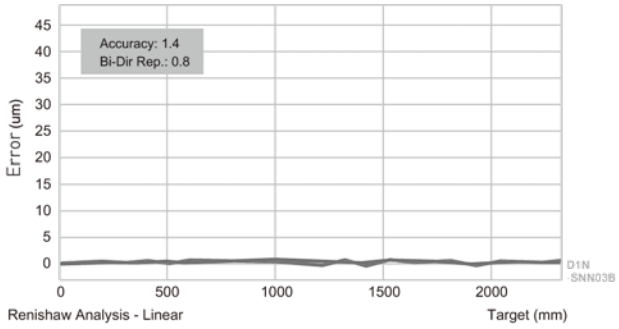

With accuracy improvement feature

Vibration Suppression Feature

The D2 drive can remove vibration frequency that occurs during movement.
It reduces vibrations caused by system's structure and improves the machine's production efficiency.

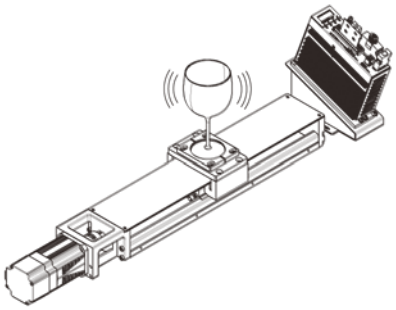

Without vibration suppression feature

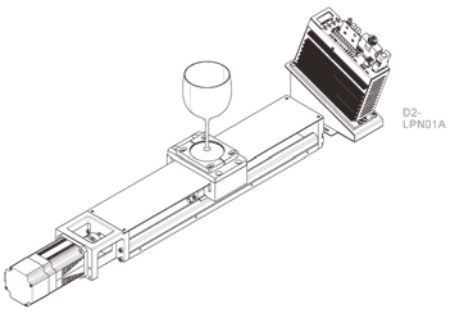

With vibration suppression feature

Electronic gear ratio and Encoder Emulator

The drive can help users adjust pulse resolution for the host controller, and to work with a variety of position encoders with different resolutions; it can also adjust analog position encoder output resolution to the host controller and meet the pulse receiving capability of different host controllers.

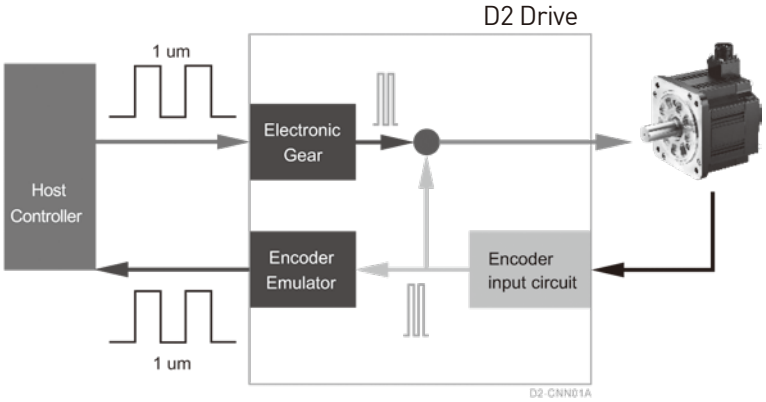

Simple Operation

Simple setup

Auto phase center

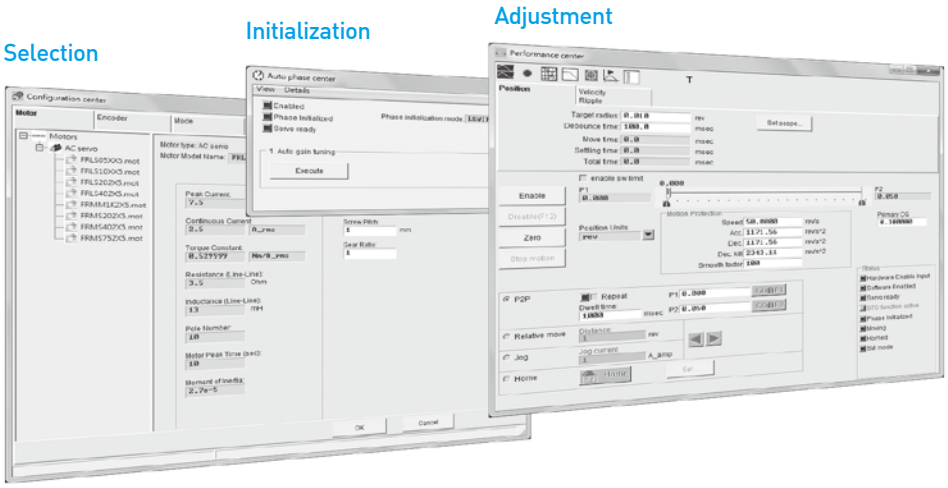

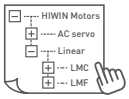

Easy Operation

Parameters are categorized according to features. Only necessary parameters are shown.
No confusing parameter list.

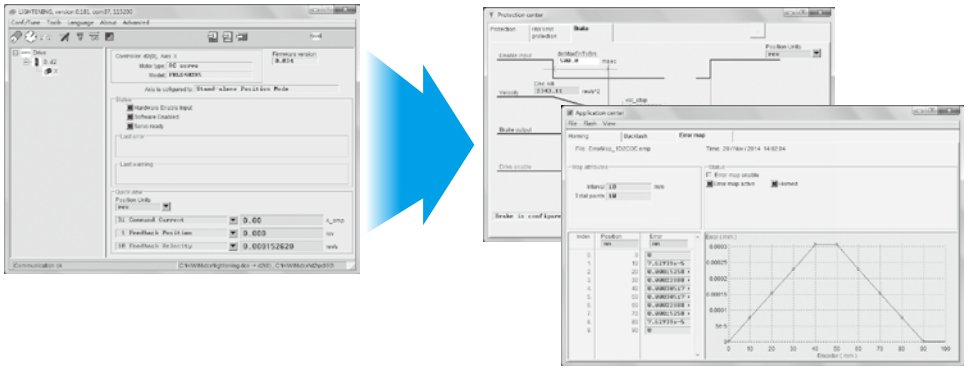

LCD Display

No need to connect to a PC to complete all of the settings and operations.
LCD display provides instant status monitoring and displays error messages. Gain and test running can be quickly set by panel keys.

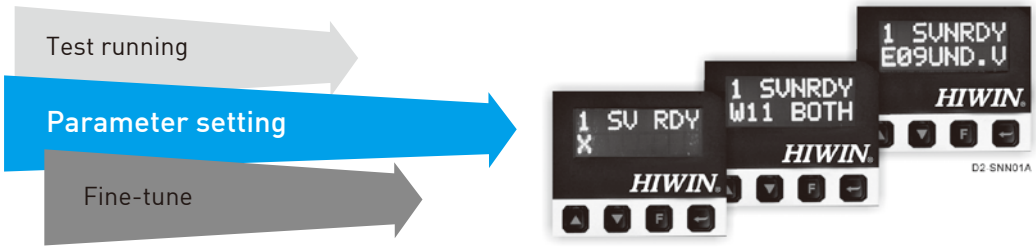

Complete tool sets

Real-time scope, accuracy enhancement function, frequency analysis tools , gain scheduling tool, analysis tool, I/O setting functions, encoder output ratio adjustment function, Z phase signal width adjustment function, PDL , ZeroTune function and filter.

Accuracy enhancement function

To improve on the positioning accuracy of motion systems, the drive amplifier is featured with an error compensation function. By taking the measurements from a laser interferometer, the positioning error table can be built inside the drive, so that high positioning accuracy is achieved.

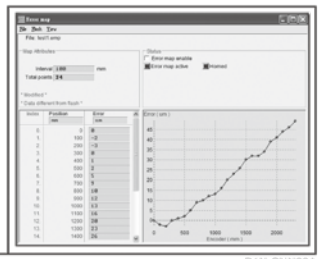

D1N-SNN08A

Frequency analysis tools

A powerful and easy to use tool for frequency analysis is provided. You can use the frequency analysis tools to display the real response in the form of a graph. You can easily set the best gain value for the system based on the real response, even first time users can easily get started.

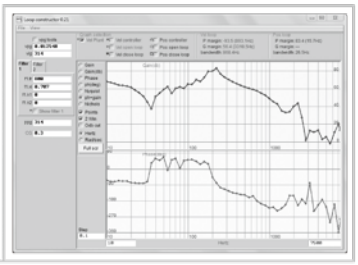

D1N-SNN10B

Advanced gain scheduling feature

After setting gains through frequency analysis tools, there is only one value to adjust: the common gain. The drive provides a gain scheduling function. You can adjust the gain according to different phases of motion, such as moving phase, settling phase, and in-position phase.

D1N-SNN09B

Variety of I / O functions

To support a number of different functions, you are free to configure the I/O pin functionality and adapt different hardware interface needs. This satisfies diverse requirements for different motion controllers with regards to their pin assignments and hardware interfaces.

D1N-SNN11B

Analysis Tools

To solve a resonance problem, the drive offers a filter design tool for improving the control performance, a Fast Fourier Transform (FFT) and other mathematical operation tools. You can use the functions to calculate the resonant frequency of the system easily, and to make the filter design more accurate.

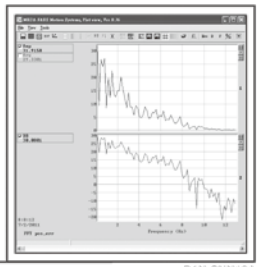

D1N-SNN12A

PDL (Process Description Language)

Easy-use process description language is provided. Complex motions can be designated via PDL, such as extrusion process, point-to-point motion, fixed speed control, homing process and so on. PDL gains the advantages of flexibility and programmability. For quick learning, a number of sample programs are provided in the PDL manual.

D2-SNN04A

ZeroTune function

Servo loop gains can be easily set without complex procedures via ZeroTune.
Only by selecting the load level of the motor, will stable velocity response be achieved. Even a beginner who has no knowledge of servo control can easily drive a motor.

D2-SNN05A

Filter

Drive supports two sets of bi-quad filters.
According to filter parameters, the bi-quad filters can be transformed into different filter types, such as low-pass filter, notch filter, ...etc. Through well-defined filters, stage vibration can be easily suppressed, and control accuracy can be significantly increased.

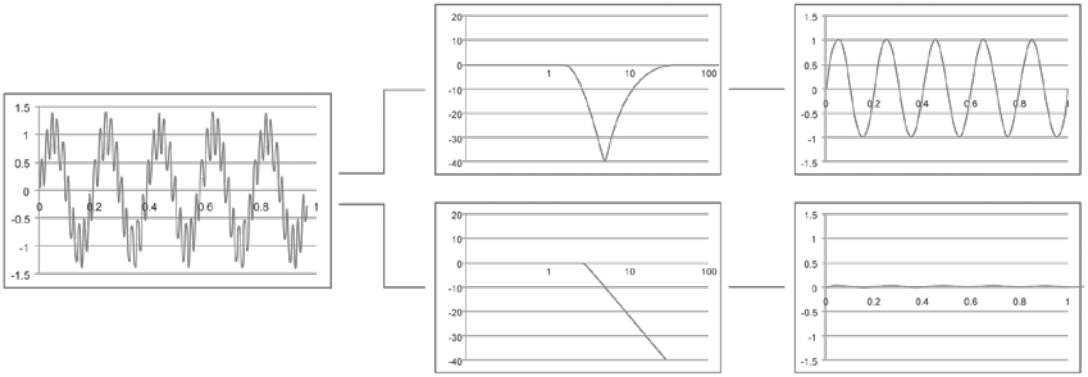

Easy integration

A complete solution with positioning module, motor and drive

In addition to providing motor and drive, a variety of linear positioning modules are provided.
We provide customers with integrated services and a total solution.

High-speed network communications interface

The D2 is equipped with Industrial Ethernet communications (EtherCAT) interface, and also supports CoE (CANopen over EtherCAT) servo drive protocol. For of multi-axis control, it provides simple wiring, low cost, noise immunity, remote and distributed control needs.

Simple and robust commnunication interface

Equipped with Modbus communication, D-series drives support Modbus over serial lines (Modbus RTU and Modbus ASCII). On the application of automation, the motor position and velocity can be easily shown on the HMI via Modbus.

10.2 Safety Certification

10.2.1 RoHS compliant

Components and finished product all meet RoHS(Restriction of Hazardous Substances Regulation) requirements which ensure the compliance to relevant laws of quality of goods.

RoHS regulations limit six hazardous substances are: Lead (Pb), mercury (Hg), hexavalent chromium (Cr6 +), Polybrominated Biphenyls (PBB), the maximum allowable content of Polybrominated diphenyl ethers (PBDE) is 0.1% (1000ppm), Cadmium (Cd) is 0.01% (100ppm).

10.2.2 Comply with CE & UL regulations

		Drive	Motor
CE Directives	EMC Directives	EMC: EN61800-3 EN55011 EN61000-6-2 EN61000-6-4 EN61000-2-4 IEC60146-1-1 IEC61000-2-1	EN55011 EN61000-6-2 EN61000-6-4
	Low-Voltage Directives	LVDS:EN61800-5-1	EN60034-1 EN60034-5
UL Directives		UL:E348161 (D2T 100W/400W/1000W)	UL1004-1 UL1004-6

10.3 Model Descriptions

10.3.1 Servo drive

Code	1	2	2a	3	4	5	6	7	8	9	10	11	12
Example	D	2	T	-	0	4	2	3	-	S	-	B	0

Product

HIWIN servo drive D2T ..... = D2T

Type

17bit encoder only..... = T
13bit encoder only..... = Blank

Rated output

100W.....= 01
400W.....= 04
1000W.....= 10
2000W.....= 20

Voltage range

1/3 phase 110/220VAC (For A,B,C frame) ..... = 23
3 phase 220VAC (Only for D frame) ..... = 32

Interface

Standard.....= S
EtherCAT(CoE) .....= E
EtherCAT(mega-ulink) .....= F
Standard with extension I/O modules .....= K
Modbus.....= T

Frame size

A frame(suggestion: 100W rated output)..... = A
B frame(suggestion: 400W rated output)..... = B
C frame(suggestion: 1000W rated output)..... = C
D frame(suggestion: 2000W rated output)..... = D

Encoder type

13bit less-wire incremental encoder..... = 0
17bit serial incermental encoder(HIWIN17) ..... = 4
Dual Loop (Full closed loop) and 17bit serial absolute encoder..... = 5

Interface / Model	Standard	EtherCAT(CoE)	EtherCAT(mega-ulink)	Standard with extension I/O modules	Modbus
D2(frame A-C)	O	O	O	X	O
D2T(frame A-C)	O	O	O	△	X
D2T(frame D)	O	O	O	△	△

O: Available X:Unavailable △:Please contact with Sales Representative.

Note Single and three phase AC voltage drive only support rated output which is lower or equal to 1000W.

10.3.2 Servo motor

Code	1	2	3	4	5	6	7	8	9	10	11	12
Example	F	R	L	S	4	0	2	0	6	0	6	A

Product

HIWIN AC servo motor series ..... = FR

Type

Low inertia, small capacity(50W~400W) .....= LS
Medium inertia, small capacity(50W/100W/
400W/750W) .....= MS
Medium inertia, medium capacity(1000W/2000W)= MM

Output Power

50W..... = 05
100W..... = 10
200W..... = 20
400W(Low inertia) ..... = 40
400W(Medium inertia)..... = 4B
750W..... = 75
1000W..... = 1K
2000W..... = 2K

Drive input voltage

220V..... = 2

Holding brake options

Without holding brake.....= 0
With holding brake .....= B

Encoder type

13bit incremental encoder[1]..... = 5
17bit absolute encoder..... = 4
HIWIN 17 incremental encoder ..... = 6

Frame size

40mm(MS 50W/100W).....= 04
42mm(LS 50W/100W).....= A4
60 mm(200W/400W) .....= 06
80 mm(750W) .....= 08
130 mm(1000W/2000W) .....= 13

Motor shaft

Round shaft / without oil seal .....= A
Round shaft / with oil seal[2] .....= B
With key and center tap / without oil seal.....= C
With key and center tap / with oil seal[2].....= D

(1) 13bit only supports FRLS05/10/20/40,FRMS75,FRMM1K
(2) FRLS 05/10 For the motor with oil seal,please contact Sales Representative

10.3.3 Motor cable

Code	1	2	3	4	5	6	7	8	9	10	11	12
Example	H	V	P	S	0	4	A	A	0	5	M	B

Type

HIWIN motor cable ..... = HVP

Capacity

Small capacity (50W~750W) .....= S
Medium capacity (1000W/2000W) .....= M

Number of pin

Motor cable without holding brake .....= 04
Motor cable with holding brake .....= 06

Motor side connector

AMP connector (50W~750W) ..... = A
Straight waterproof connector (1000W/2000W) ..... = B
L-type waterproof connector (1000W/2000W) ..... = C

Drive side connector

Open cable ends (50W~1000W) .....= A
R-type terminals (2000W) .....= B

Cable length

3M.....= 03M
5M.....= 05M
7M.....= 07M
10M.....= 10M

Cable type

Highly flexible ..... = B

10.3.4 Encoder cable

Code	1	2	3	4	5	6	7	8	9	10	11	12
Example	H	V	E	1	7	I	A	B	0	5	M	B

Type

HIWIN encoder cable..... = HVE

Encoder Type

13bit incremental encoder .....= 13I
HIWIN 17 incremental encoder.....= 17I
17bit absolute encoder.....= 17A

Encoder connector

AMP connector (50W~750W) ..... = A
Straight waterproof connector (1000W/2000W) ..... = B
L-type waterproof connector (1000W/2000W) ..... = C

Drive side connector

SCR connector..... = B

Cable length

3M.....= 03M
5M.....= 05M
7M.....= 07M
10M.....= 10M

Cable type

Highly flexible .....= B

10.4 Interface Directions

10.4.1 Frame A-C

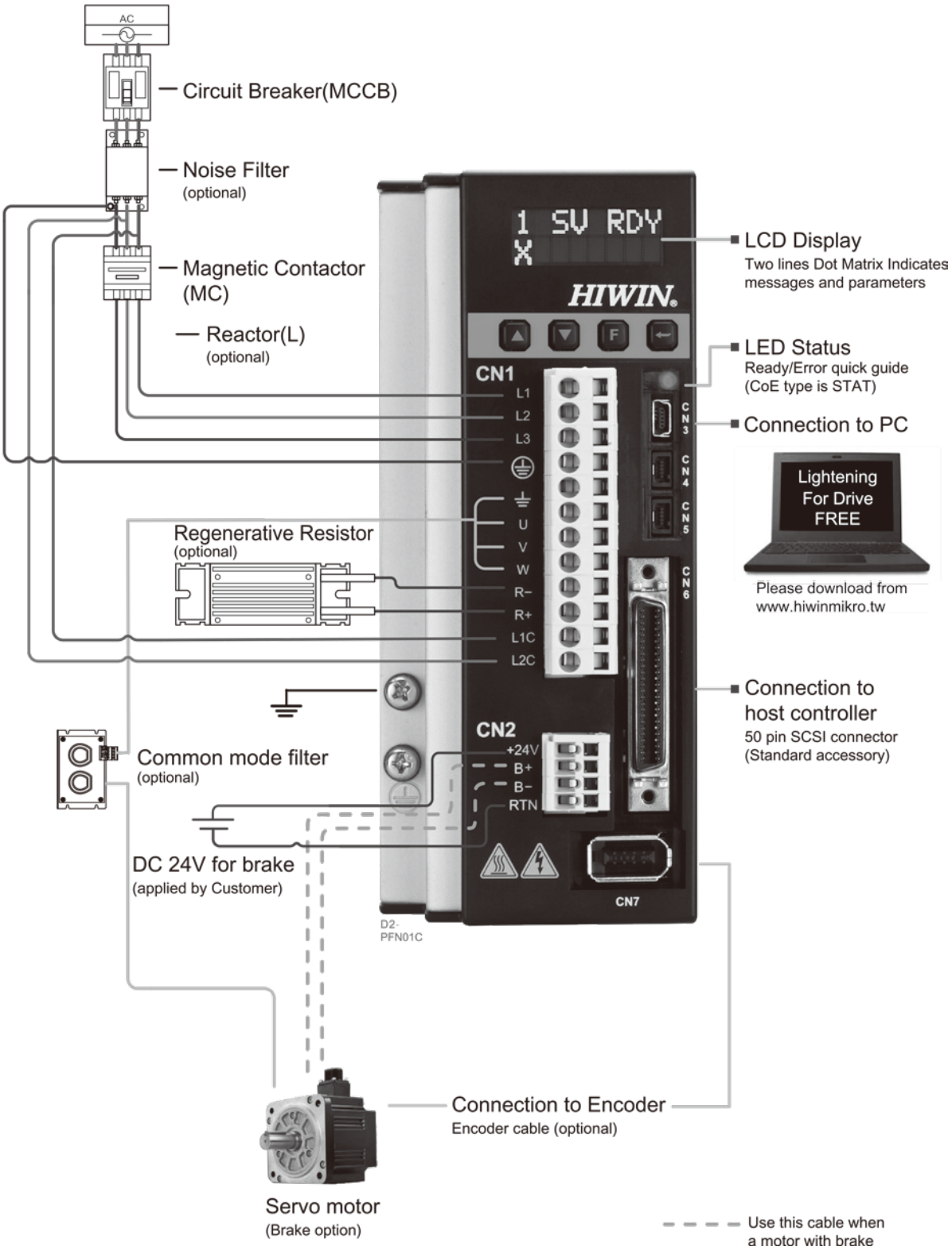

10.4.2 Frame D

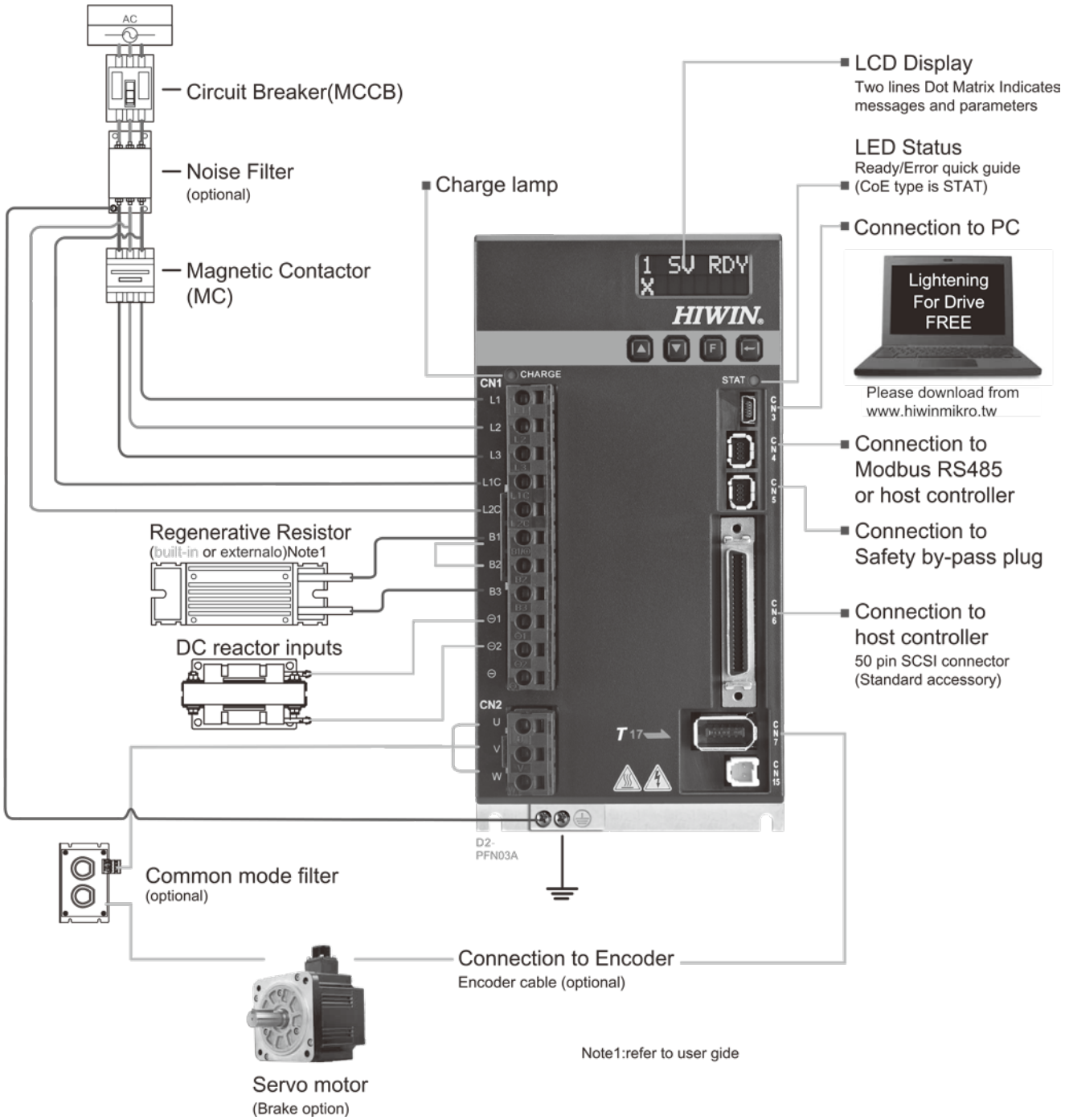
AC
Circuit Breaker(MCCB)
Noise Filter
(optional)
Magnetic Contactor
(MC)
Charge lamp
LCD Display
Two lines Dot Matrix Indicates messages and parameters
LED Status
Ready/Error quick guide
(CoE type is STAT)
Connection to PC
Lightening For Drive FREE
Please download from www.hiwinmikro.tw
Connection to Modbus RS485 or host controller
Connection to Safety by-pass plug
Connection to host controller
50 pin SCSI connector
(Standard accessory)
1 SV RDY
X
HIWIN.
CHARGE
STAT
CN1
L1
L2
L3
L1C
L2C
B1
B2
B3
⊖1
⊖2
⊖
CN2
U
V
W
CN3
CN4
CN5
CN6
CN7
CN15
T17
D2-
PFN03A
Regenerative Resistor
(built-in or externalo)Note1
DC reactor inputs
Common mode filter
(optional)
Connection to Encoder
Encoder cable (optional)
Servo motor
(Brake option)
Note1:refer to user gide

10.5 Part numbers and options

Name	Motor cable			Encoder cable	Other accessories
50W | 750W	without brake		HVPS04AA	HVE13IAB HVE17IAB HVE17AAB	Control signal cable: LMACK02D Single phase EMC Pack: D2-EMC1 or D2-EMC3 3 phase EMC Pack: D2-EMC2 Common mode filter MF-CM-S DC reactor B86732G15L712
	with brake		HVPS06AA		
1000W	without brake	Straight type	HVPM04BA	HVE13IBB(Straight type) HVE17IBB(Straight type) HVE17ABB(Straight type) HVE13ICB(L-type) HVE17ICB(L-type) HVE17ACB(L-type)	
		L-type	HVPM04CA		
	with brake	Straight type	HVPM06BA		
		L-type	HVPM06CA		
2000W	without brake	Straight type	HVPM04BB	HVE17IBB(Straight type) HVE17ABB(Straight type) HVE17ICB(L-type) HVE17ACB(L-type)	
		L-type	HVPM04CB		
	with brake	Straight type	HVPM06BB		
		L-type	HVPM06CB		

! Straight type : straight waterproof connector
L-type : waterproof connector

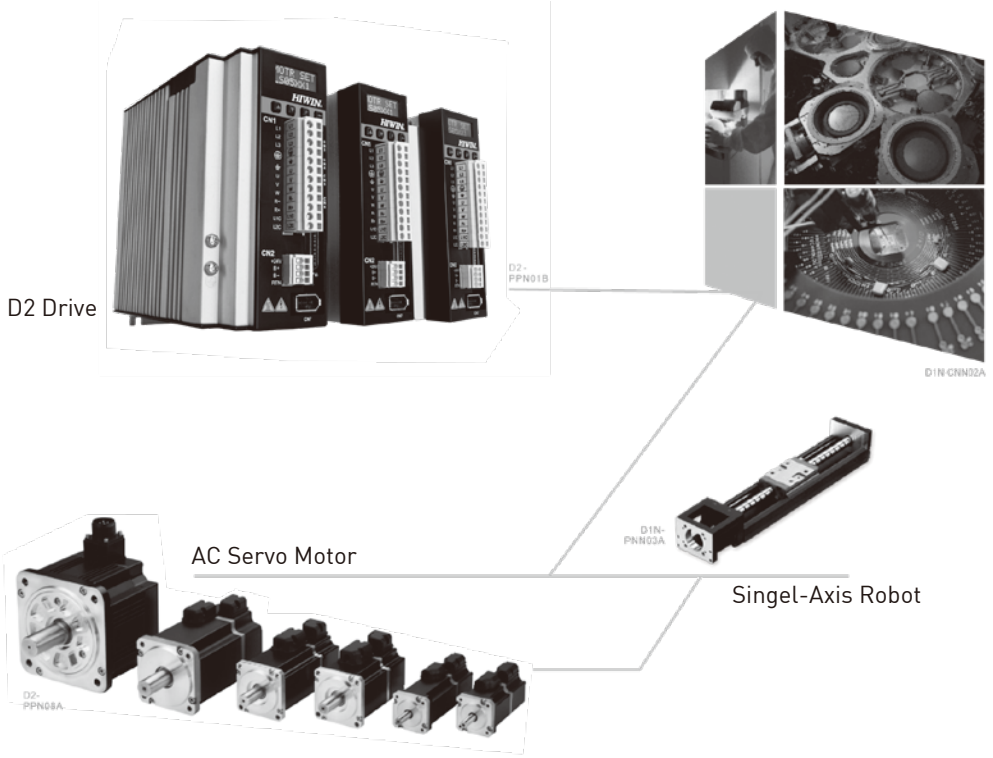
D2 Drive
D2-PPN01B
D1N-CNN02A
D1N-PNN03A
AC Servo Motor
Singel-Axis Robot
D2-PPN08A

10.5.1 AC50W~AC750W-13bit incremental encoder

Motor					Drive		Power capacity (Rated load)
Motor Series		Power supply	Output (W)	Part No. (Note 1)	Part No. (Standard interface)	Frame	
Low inertia	FRLS	Single phase/ three phase 220V	50	FRLS05205A4△	D2T-0123-S-A0	Frame A	Approx. 0.4kVA
				FRLS052B5A4△			
			100	FRLS10205A4△			
				FRLS102B5A4△			
			200	FRLS2020506△	D2T-0423-S-B0	Frame B	Approx. 0.9kVA
				FRLS202B506△			
			400	FRLS4020506△			
				FRLS402B506△			
Middle inertia	FRMS		750	FRMS7520508△	D2T-1023-S-C0	Frame C	Approx. 1.8kVA
				FRMS752B508△			

Note1 △ : Shaft End & Oil Seal Specification (Please refer to P.177)

Note3 EMC pack model (please refer to P.207)

Note2 Selection of cable / 50W~750W

Motor cable / without brake

HVPS04AA □□□ B

Cable length

3M..... =03M
5M..... =05M
7M..... =07M
10M..... =10M

Cable type

Highly flexible ..... = B

Motor cable and brake cable / with brake

HVPS06AA □□□ B

Cable length

3M..... =03M
5M..... =05M
7M..... =07M
10M..... =10M

Cable type

Highly flexible ..... = B

! For more information about cables, please refer to P.221-P.227

Optional parts						
Motor cable(Note 2)		Encoder cable	D2 drive accessories			
without brake	with brake	13bit incremental (Note 2)	Control Signal Cable	Single phase EMC Pack (Note 3)	Three phase EMC Pack (Note 3)	External Regenerative Resistor
HVPS04AA□□□B	HVPS06AA□□□B	HVE13IAB□□□B	LMACK02D	D2-EMC1	D2-EMC2	N/A
						RG1
				D2-EMC3		RG2

Encoder cable / 13bit incremental

HVE13IAB □□□ B

Cable length

3M.....=03M
5M.....=05M
7M.....=07M
10M.....=10M

Cable type

Highly flexible ..... = B

10.5.2 AC1000W-13bit incremental encoder

Motor					Drive		Power capacity (Rated load)
Motor Series		Power supply	Output (W)	Part No. (Note 1)	Part No. (Standard interface)	Frame	
Middle inertia	FRMS	Single phase/ three phase 220V	1000	FRMM1K20513△	D2T-1023-S-C0	Frame C	Approx. 1.8kVA
				FRMM1K2B513△			

Note1 △ : Shaft End & Oil Seal Specification (Please refer to P.177)

Note3 EMC pack model (please refer to P.207)

Note2 Selection of cable / 1000W

■ Motor cable / without brake

HVPM04□A□□□ B

Motor side connector

Straight Type .....=B
L-Shaped Type ....=C

Cable length

3M.....=03M
5M.....=05M
7M.....=07M
10M.....=10M

Cable type

Highly flexible .....= B

■ Motor cable and brake cable / with brake

HVPM06□A□□□ B

Motor side connector

Straight Type .....=B
L-Shaped Type ....=C

Cable length

3M.....=03M
5M.....=05M
7M.....=07M
10M.....=10M

Cable type

Highly flexible .....= B

! For more information about cables, please refer to P.221-P.227

Note5 Medium capacity motor brake power cables are packaged.

Item number HVPM06:

Contains one motor cable and brake cable labeled with HVPM04 and HVPM02.

	Optional parts						
	Motor cable(Note 2)		Encoder cable	D2 drive accessories			
	without brake	with brake	13bit incremental (Note 2)	Control Signal Cable	Single phase EMC Pack (Note 3)	Three phase EMC Pack (Note 3)	External Regenerative Resistor
	HVPM04□A□□□B	HVPM06□A□□□B	HVE13I□B□□□B	LMACK02D	D2-EMC3	D2-EMC2	RG2

Encoder cable / 13bit incremental

HVE13I□B□□□ B

Motor side connector

Straight Type .....=B
L-Shaped Type ....=C

Cable length

3M.....=03M
5M.....=05M
7M.....=07M
10M.....=10M

Cable type

Highly flexible .....= B

10.5.3 AC50W~AC750W-17bit incremental encoder

Motor					Drive		Power capacity (Rated load)
Motor Series		Power supply	Output (W)	Part No. (Note 1)	Part No. (Standard interface)	Frame	
Low inertia	FRLS	Single phase/ three phase 220V	50	FRLS05206A4Δ	D2-0123-S-A4	Frame A	Approx. 0.4kVA
				FRLS052B6A4Δ			
			100	FRLS10206A4Δ			
				FRLS102B6A4Δ			
			200	FRLS2020606Δ	D2-0423-S-B4	Frame B	Approx. 0.9kVA
				FRLS202B606Δ			
			400	FRLS4020606Δ			
				FRLS402B606Δ			
Middle inertia	FRMS		50	FRMS0520604Δ	D2-0123-S-A4	Frame A	Approx. 0.4KVA
				FRMS052B604Δ			
			100	FRMS1020604Δ			
				FRMS102B604Δ			
			400	FRMS4B20606Δ	D2-0423-S-B4	Frame B	Approx. 0.9KVA
				FRMS4B2B606Δ			
			750	FRMS7520608Δ	D2-1023-S-C4	Frame C	Approx. 1.8KVA
				FRMS752B608Δ			

Note1 Δ：Shaft End & Oil Seal Specification (Please refer to P.177)

Note3 EMC pack model (please refer to P.207)

Note2 Selection of cable / 50W~750W

■ Motor cable / without brake

HVPS04AA □□□ B

Cable length

3M..... =03M
5M..... =05M
7M..... =07M
10M..... =10M

Cable type

Highly flexible ..... = B

■ Motor cable and brake cable / with brake

HVPS06AA □□□ B

Cable length

3M..... =03M
5M..... =05M
7M..... =07M
10M..... =10M

Cable type

Highly flexible ..... = B

! For more information about cables, please refer to P.221-P.227

Optional parts						
Motor cable(Note 2)		Encoder cable	D2 drive accessories			
without brake	with brake	13bit incremental (Note 2)	Control Signal Cable	Single phase EMC Pack (Note 3)	Three phase EMC Pack (Note 3)	External Regenerative Resistor
HVPS04AA□□□B	HVPS06AA□□□B	HVE17IAB□□□B	LMACK02D	D2-EMC1	D2-EMC2	N/A
						RG1
				D2-EMC3		RG2

Encoder cable / 17bit incremental

HVE17IAB □□□ B

Cable length

3M..... =03M
5M..... =05M
7M..... =07M
10M..... =10M

Cable type

Highly flexible ..... = B

10.5.4 AC1000W/AC2000W-17bit incremental encoder

Motor					Drive		Power capacity (Rated load)
Motor Series		Power supply	Output (W)	Part No. (Note 1)	Part No. (Standard interface)	Frame	
Middle inertia	FRMM	Single phase/ three phase 220V	1000	FRMM1K20613△	D2-1023-S-C4	Frame C	Approx. 1.8kVA
				FRMM1K2B613△			
		three phase 220V	2000	FRMM2K20613△	D2-2032-S-D4	Frame D	Approx. 3.5kVA
				FRMM2K2B613△			

Note1 △ : Shaft End & Oil Seal Specification (Please refer to P.177)

Note3 EMC pack model (please refer to P.207)

Note2 Selection of cable / 1000W, 2000W

Motor cable / without brake

HVPM04□ A □□□ B

Motor side connector
Straight Type .....=B
L-Shaped Type ....=C

Drive side connector
Open cable ends ..... =A
R-type terminals ..... =B

Cable length
3M..... =03M
5M..... =05M
7M..... =07M
10M..... =10M

Cable type
Highly flexible ..... = B

For more information about cables, please refer to P.221-P.227

Motor cable and brake cable / with brake

HVPM06□ A □□□ B

Motor side connector
Straight Type .....=B
L-Shaped Type ....=C

Drive side connector
Open cable ends ..... =A
R-type terminals ..... =B

Cable length
3M..... =03M
5M..... =05M
7M..... =07M
10M..... =10M

Cable type
Highly flexible ..... = B

Note5 Medium capacity motor brake power cables are packaged.
Item number HVPM06:
Contains one motor cable and brake cable labeled with HVPM04 and HVPM02.

	Optional parts						
	Motor cable(Note 2)		Encoder cable	D2 drive accessories			
	without brake	with brake	13bit incremental (Note 2)	Control Signal Cable	Single phase EMC Pack (Note 3)	Three phase EMC Pack (Note 3)	External Regenerative Resistor
	HVPM04□A□□□B	HVPM06□A□□□B	HVE17I□B□□□B	LMACK02D	D2-EMC3	D2-EMC2	RG2
	HVPM04□B□□□B	HVPM06□B□□□B					

Encoder cable / 17bit incremental

HVE17I□B□□□ B

Motor side connector

Straight Type .....=B
L-Shaped Type ....=C

Cable length

3M.....=03M
5M.....=05M
7M.....=07M
10M.....=10M

Cable type

Highly flexible .....= B

10.5.5 AC50W~AC750W-17bit absolute encoder

Motor					Drive		Power capacity (Rated load)
Motor Series		Power supply	Output (W)	Part No. (Note 1)	Part No. (Standard interface)	Frame	
Low inertia	FRLS	Single phase/ three phase 220V	50	FRLS05204A4Δ	D2-0123-S-A5	Frame A	Approx. 0.4KVA
				FRLS052B4A4Δ			
			100	FRLS10204A4Δ			
				FRLS102B4A4Δ			
			200	FRLS2020406Δ	D2-0423-S-B5	Frame B	Approx. 0.9kVA
				FRLS202B406Δ			
			400	FRLS4020406Δ			
				FRLS402B406Δ			
Middle inertia	FRMS		50	FRMS0520404Δ	D2-0123-S-A5	Frame A	Approx. 0.4KVA
				FRMS052B404Δ			
			100	FRMS1020404Δ			
				FRMS102B404Δ			
			400	FRMS4B20406Δ	D2-0423-S-B5	Frame B	Approx. 0.9KVA
				FRMS4B2B406Δ			
			750	FRMS7520408Δ	D2-1023-S-C5	Frame C	Approx. 1.8KVA
				FRMS752B408Δ			

Note1 Δ：Shaft End & Oil Seal Specification (Please refer to P.177)

Note3 EMC pack model (please refer to P.207)

Note2 Selection of cable / 50W~750W

■ Motor cable / without brake

HVPS04AA □□□ B

Cable length

3M..... =03M
5M..... =05M
7M..... =07M
10M..... =10M

Cable type

Highly flexible ..... = B

■ Motor cable and brake cable / with brake

HVPS06AA □□□ B

Cable length

3M..... =03M
5M..... =05M
7M..... =07M
10M..... =10M

Cable type

Highly flexible ..... = B

! For more information about cables, please refer to P.221-P.227

Optional parts						
Motor cable(Note 2)		Encoder cable	D2 drive accessories			
without brake	with brake	13bit incremental (Note 2)	Control Signal Cable	Single phase EMC Pack (Note 3)	Three phase EMC Pack (Note 3)	External Regenerative Resistor
HVPS04AA□□□B	HVPS06AA□□□B	HVE17AAB□□□B	LMACK02D	D2-EMC1	D2-EMC2	N/A
						RG1
				D2-EMC3		RG2

Encoder cable / 17bit absolute

HVE17AAB □□□ B

Cable length

3M.....=03M
5M.....=05M
7M.....=07M
10M.....=10M

Cable type

Highly flexible ..... = B

10.5.6 AC1000W/AC2000W-17bit absolute encoder

Motor					Drive		Power capacity (Rated load)
Motor Series		Power supply	Output (W)	Part No. (Note 1)	Part No. (Standard interface)	Frame	
Middle inertia	FRMM	Single phase/ three phase 220V	1000	FRMM1K20413△	D2-1023-S-C5	Frame C	Approx. 1.8kVA
				FRMM1K2B413△			
		three phase 220V	2000	FRMM2K20413△	D2-2032-S-D5	Frame D	Approx. 3.5kVA
				FRMM2K2B413△			

Note1 △ : Shaft End & Oil Seal Specification (Please refer to P.177)

Note3 EMC pack model (please refer to P.207)

Note2 Selection of cable / 1000W, 2000W

Motor cable / without brake

HVPM04□ A □□□ B

Motor side connector
Straight Type.....=B
L-Shaped Type ....=C

Drive side connector
Open cable ends ..... =A
R-type terminals ..... =B

Cable length
3M..... =03M
5M..... =05M
7M..... =07M
10M..... =10M

Cable type
Highly flexible ..... = B

! For more information about cables, please refer to P.221-P.227

Motor cable and brake cable / with brake

HVPM06□ A □□□ B

Motor side connector
Straight Type.....=B
L-Shaped Type ....=C

Drive side connector
Open cable ends ..... =A
R-type terminals ..... =B

Cable length
3M..... =03M
5M..... =05M
7M..... =07M
10M..... =10M

Cable type
Highly flexible ..... = B

Note5 Medium capacity motor brake power cables are packaged.
Item number HVPM06:
Contains one motor cable and brake cable labeled with HVPM04 and HVPM02.

Optional parts						
Motor cable(Note 2)		Encoder cable	D2 drive accessories			
without brake	with brake	13bit incremental (Note 2)	Control Signal Cable	Single phase EMC Pack (Note 3)	Three phase EMC Pack (Note 3)	External Regenerative Resistor
HVPM04□A□□□B	HVPM06□A□□□B	HVE17A□B□□□B	LMACK02D	D2-EMC3	D2-EMC2	RG2
HVPM04□B□□□B	HVPM06□B□□□B					

Encoder cable / 17bit absolute

HVE17A□B□□□ B

Motor side connector

Straight Type .....=B
L-Shaped Type ....=C

Cable length

3M..... =03M
5M..... =05M
7M..... =07M
10M..... =10M

Cable type

Highly flexible ..... = B

10.6 Servo Drive

10.6.1 Servo drive with standard interface

Specifications

Input power	220V	Main power	Frame A~C	Single/three phase, 200 to 240V 50/60Hz
			Frame D	Three phase,200-240 Vac 50/60Hz
		Control power	Frame A~D	Single phase, 200 to 240V 50/60Hz
Environment		Temperature		Operation Temperature: 0˚C~45˚C (If temperature is higher than 45˚C, ventilation is needed) Storage Temperature: -20˚C~65˚C
		Humidity		0 to 90%RH (no frost)
		Altitude		Under 1000 Meters
		Vibration		1G (10 to 500Hz)
Control method				IGBT PWM space vector control
Encoder feedback				13bit incremental 17bit incremental Dual loop (Full closed loop) and 17bit absolute
I/O signal connector		Control signal	Input	General purpose 9 inputs (D2T:10)
			Output	General purpose 4 outputs (D2T:5)
		Analog signal	Input	1 input (12bit A/D)
			Output	2 outputs (Analog monitor-under construction)
		Pulse signal	Input	2 inputs (Low speed channel, High speed channel)
			Output	4 outputs (Line drive: 3output, open collector: 1 output)
Brake connector		Control signal	Output	Direct brake connection. (no need of extra relay for brake) Also programmable for general purpose output
Communication function			USB	Connection with PC, 115200bps
Front panel				Dot matrix 2*8 characters LCD with 4 buttons LED(green, red)
Regenerative function			Frame A-C	Need external connection, no internal regenerative resistor
			Frame D	Built in or external regenerative resistor (option), 13Ω±5%, continue power 120W, Peak power 600W
Control mode				Switching among the following modes is possible (1)Position control (2)Velocity control (3)Torque control (4)Position/Velocity control (5)Position/Torque control (6)Velocity/Torque control
Dynamic brake			Frame A-C	N/A
			Frame D	Built in line resistance: 2.6 Ω ± 5%, continuous power: 120 W, peak power: 600 W

Functions

Position control	Control input		(1)Axis enable; (2)Left and right limit switch; (3)Home OK, start err. map; (4)Reset amplifier; (5)Near home sensor; (6)Clear error; (7)Switch to secondary CG and vpg; (8)Inhibit pulse command; (9)Switch HI/LO pulse input; (10)Abort motion; (11)Switch to secondary mode; (12)Start homing; (13)Electronic gear select (DIV1/DIV2)
	Control output		(1)Brake; (2)Servo ready; (3)Axis disable; (4)In-position; (5)Moving; (6)Homed; (7)Emulated index; (8)Zero speed detected; (9)Errors
	Pulse input	Max. command pulse frequency	Dedicated interface for Photo-coupler(Single end input): 500kpps Dedicated interface for line drive(differential input): 4Mpps(16M cnt/s with AqB)
		Input pulse signal format	(1)Pulse and Direction (2)Pulse Up/Pulse Down (3)Quadrature(AqB)
		Electronic gear (Division/ Multiplication of command pulse)	Gear ratio : pulses/counts pulses : 1~2, 147, 483, 647 counts : 1~2, 147, 483, 647
		Smoothing filter	Smooth factor : 1~500 (0: no smoothing filter)
	Vibration suppression filter(VSF)		VSF can remove the vibration frequency that occurs during movement. It can reduce the vibration caused by the system's structure and improve the machine's productivity.
Velocity control	Control input		(1)Axis enable; (2)Left and right limit switch; (3)Home OK, start err. map; (4)Reset amplifier; (5)Near home sensor; (6)Clear error; (7)Invert V command; (8)Switch to secondary CG and vpg; (9)Zero speed clamp; (10)Abort motion; (11)Switch to secondary mode
	Control output		(1)Brake; (2)Servo ready; (3)Axis disable; (4)In-position; (5)Moving; (6)Homed; (7)Emulated index; (8)Zero speed detected; (9)Errors
	PWM input	Velocity command input	Speed command input can be provided by means of duty cycle of PWM input. Parameter are used for scale setting and command polarity.
	Analog Input	Velocity command input	Speed instruction can be set with analog voltage method, parameters can set ratio and direction +/-10V
	Zero speed clamp		Zero speed clamp input is possible.
Torque control	Control input		(1)Axis enable; (2)Left and right limit switch; (3)Home OK, start err. map; (4)Reset amplifier; (5)Near home sensor; (6)Clear error; (7)Invert V command; (8)Switch to secondary CG and vpg; (9)Switch to secondary mode
	Control output		(1)Brake; (2)Servo ready; (3)Axis disable; (4)In-position; (5)Moving; (6)Homed; (7)Emulated index; (8)Zero speed detected; (9)Errors
	PWM input	Torque command input	Torque command input can be provided by means of duty cycle of PWM input. Parameter are used for scale setting and command polarity.
	Analog Input	Torque command input	Torque command input can be provided by means of analog voltage. Parameter are used for scale setting and command polarity.
	Speed limit function		Speed limit value with parameter is possible
Common	ZeroTune		ZeroTune can find the porper gains by clicking one button on LCD when the motor is disable.
	Emulated encoder feedback output		Set up of any value is possible (frequency up to 18M cnt/s, only frame D drive up to 9M cnt/s)
	Protective function		(1)Motor short detection; (2)Over voltage; (3)Position error too big; (4)Encoder error; (5)Soft thermal threshold reached; (6)Motor maybe disconnect; (7)Amplifier over temperature; (8)Under voltage; (9)5V for encoder card fail; (10)Phase init. error; (11)Serial encoder communication error; (12)Hall sensor error; (13)Current control error; (14)Hybrid deviation too big; (15)HFLT inconsistent error; (16)Incompatible motor model for drive; (17)DC bus voltage abnormal; (18)EtherCAT interface disconnected
	Error log		Errors and warnings are saved in non-volatile memory
	Error Mapping		Method: Established compensation table to compensate encoder error by linear interpolation
			Samples: Maximum 5,000 point
			Storage: Flash ROM, Disc file
			Unit: count
			Activation: Activated internally by home complete, or activated externally by input signal
	Others		Friction compensation, Backlash compensation

10.6.2 Wiring diagram

Single phase

Recommended models: FN2090-6-06 filter	
Maximum continuous operating voltage	250VAC, 50/60Hz
Operating Frequency	DC to 400Hz
Rated Current	6A@40°C
Surge pulse protection	2kV, IEC 61000-4-5

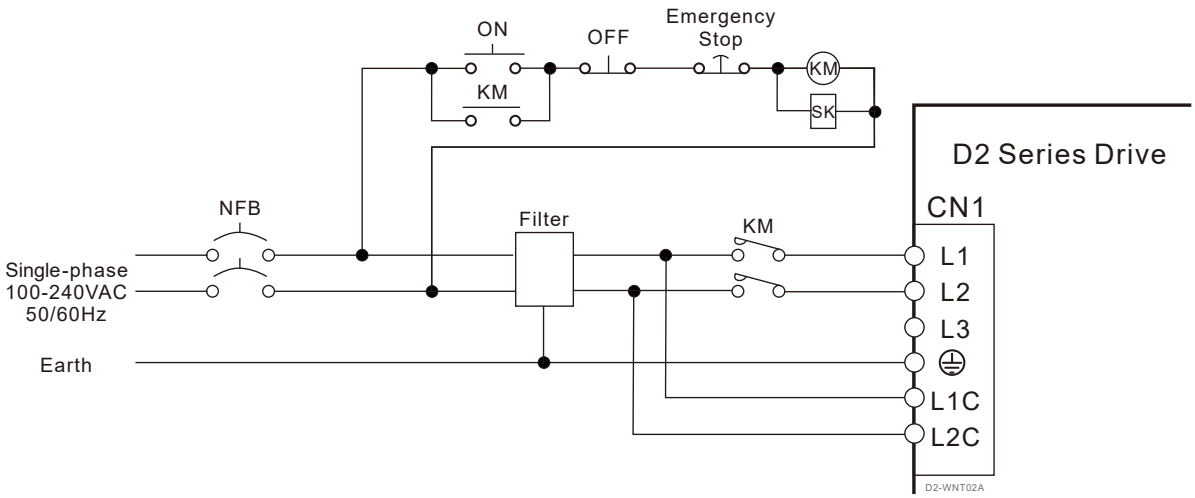

Three-phase

Recommended models: FN3025L-20-71 filter	
Maximum continuous operating voltage	3x520/300 VAC
Operating Frequency	DC to 400Hz
Rated Current	20A@50˚C

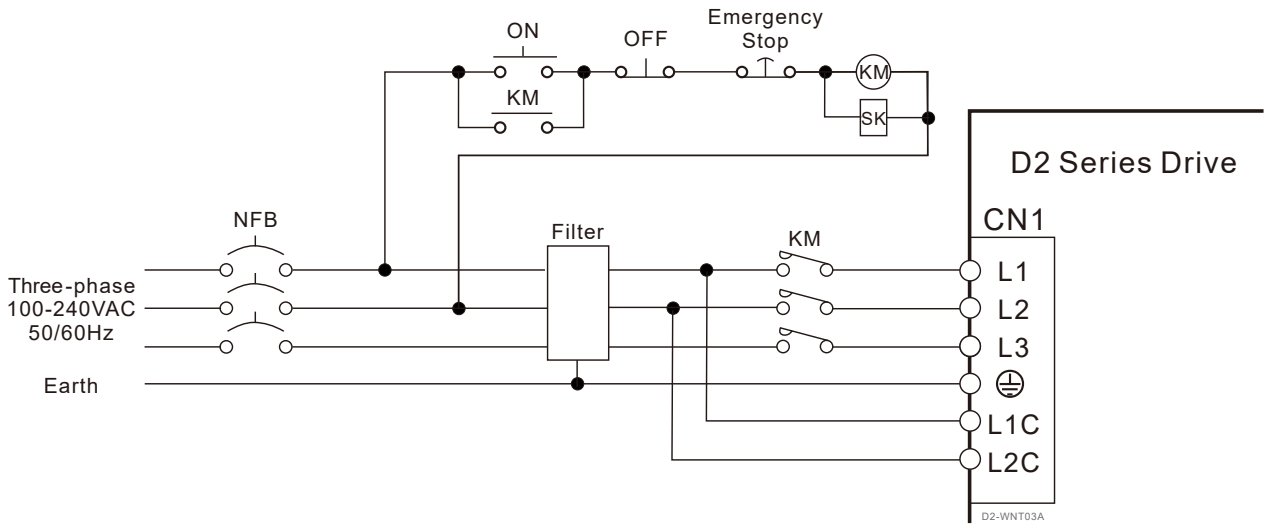

10.6.3 Control circuit

Wiring Example of Position Control Mode

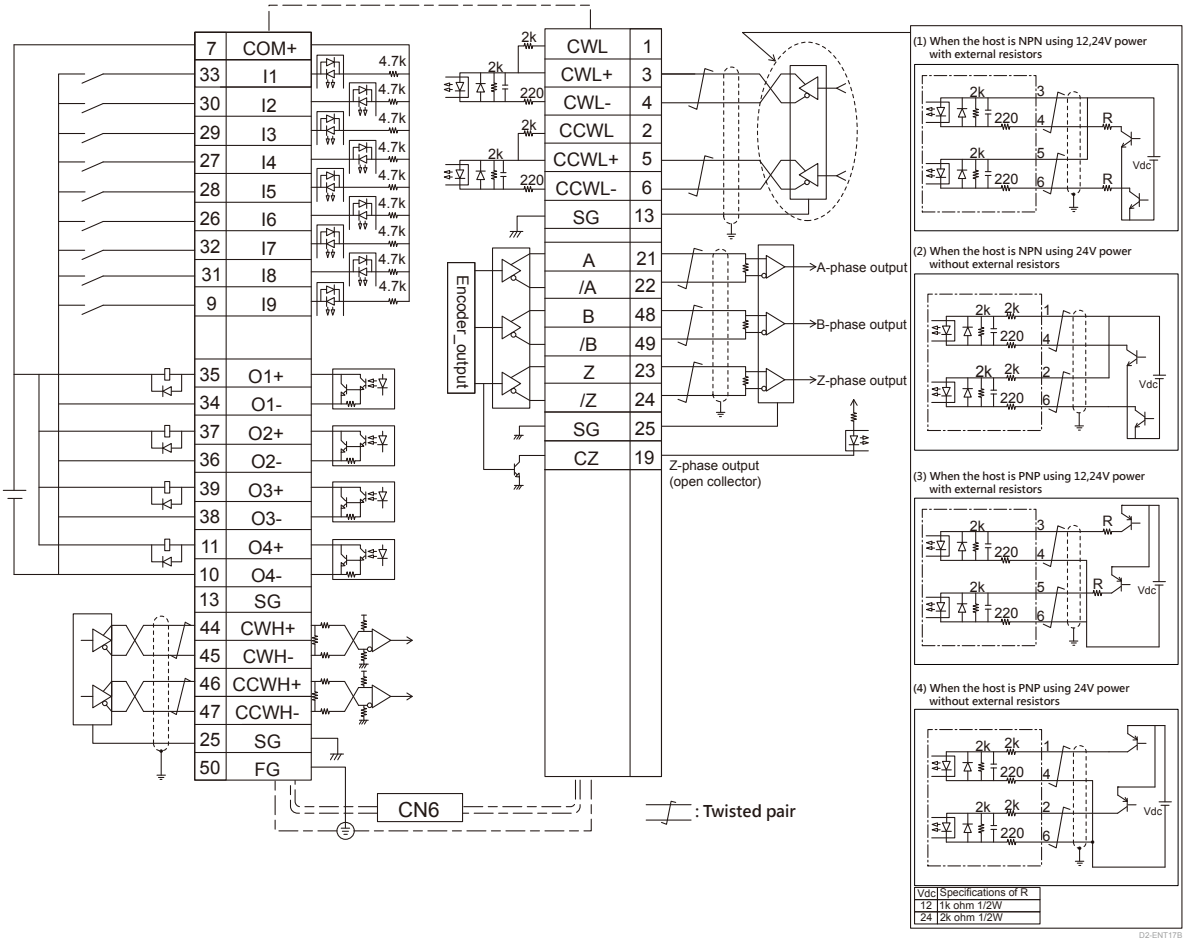

Wiring Example of Velocity/Torque Control Mode

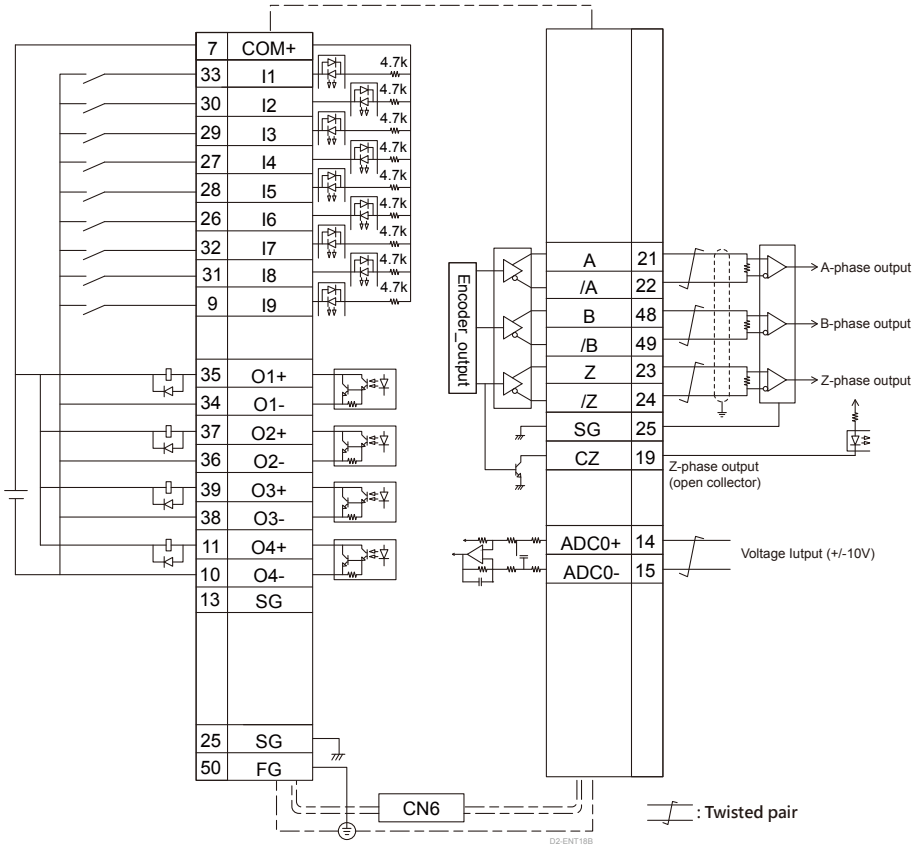

Additional I/O pins (Only for D2 drive)

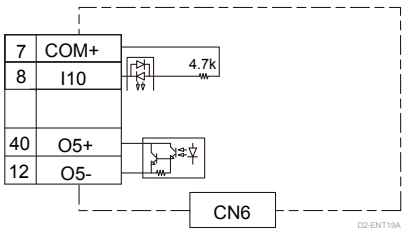

10.6.4 Dimensions of drive

■ Frame A (D2x-01xx-S(T)-Ax)

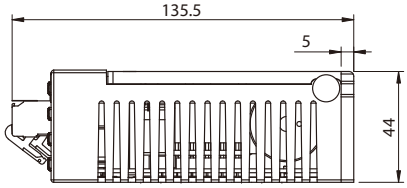

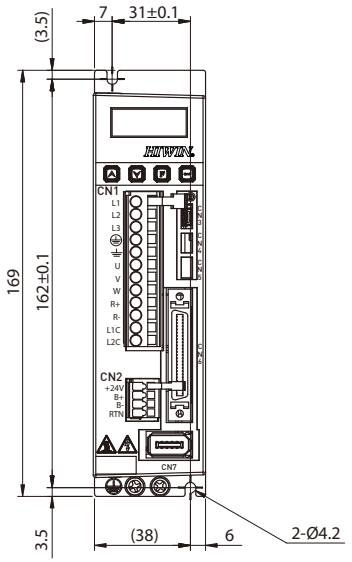

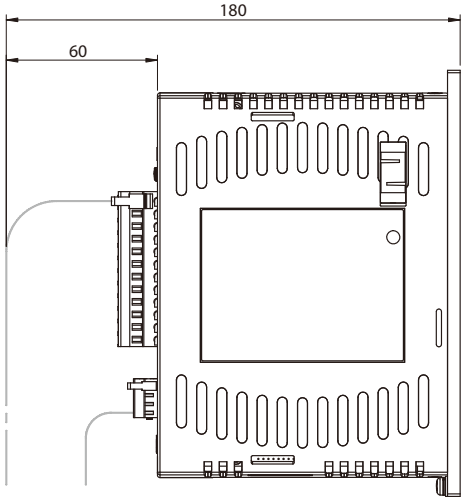

Unit:mm
D2-DNN01B

■ Frame B (D2x-04xx-S(T)-Bx)

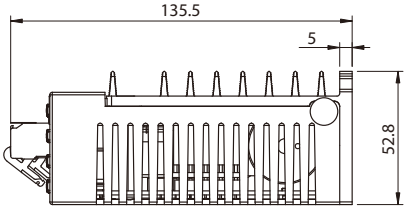

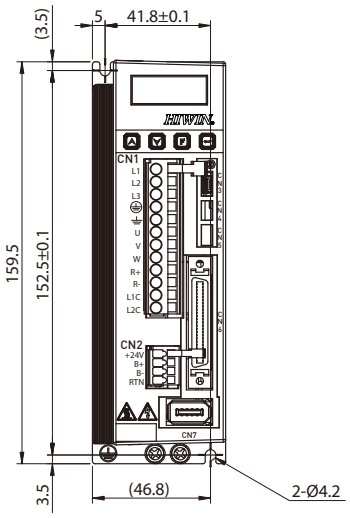

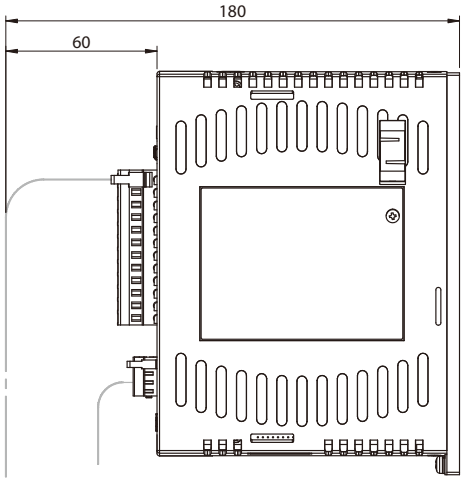

Unit:mm
D2-DNN02B

Frame C (D2x-10xx-S(T)-Cx)

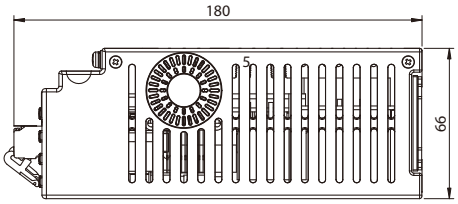

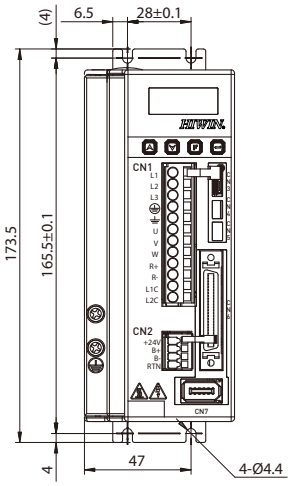

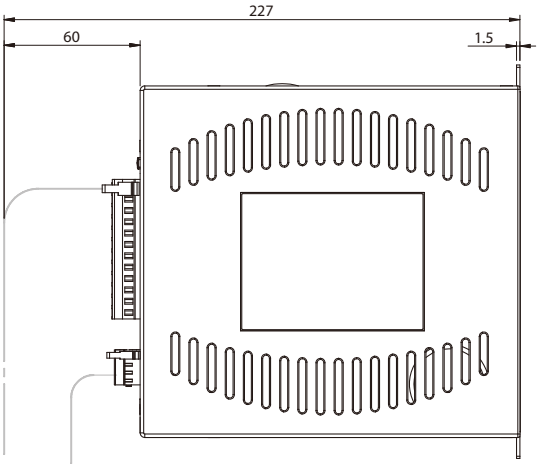

Unit:mm
D2-DNN03B

Frame D (D2x-20xx-S(T)-Dx)

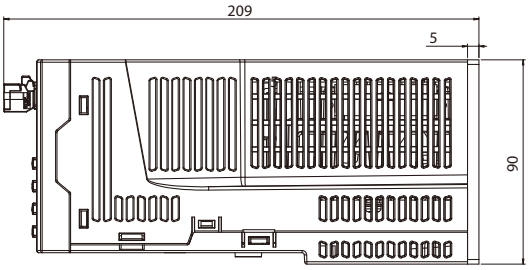

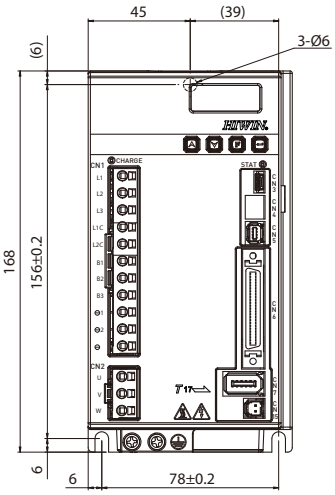

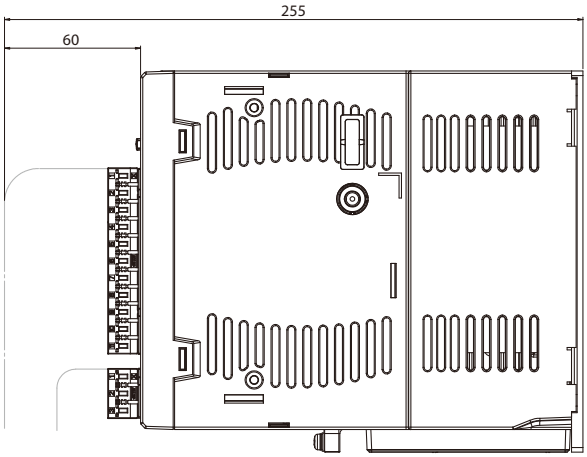

Unit:mm
D2-DNN52A

Frame A (D2x-01xx-E(Note)-Ax)

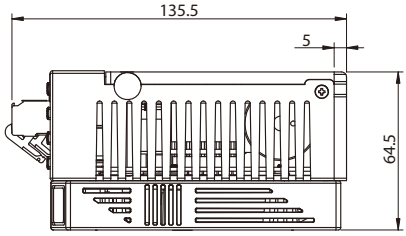

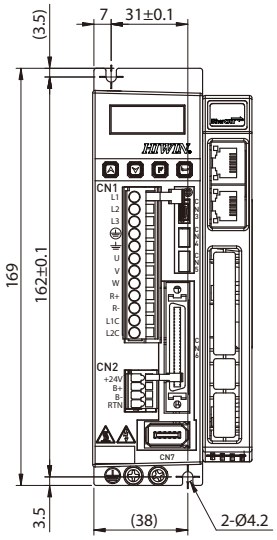

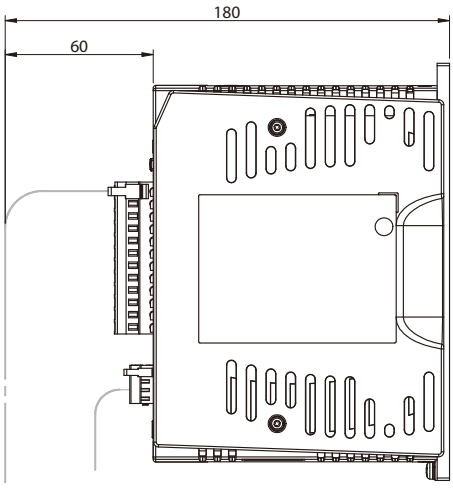

Unit:mm
D2-DNN49B

Frame B (D2x-04xx-E(Note)-Bx)

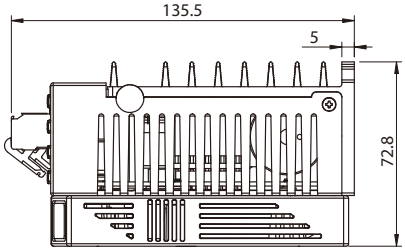

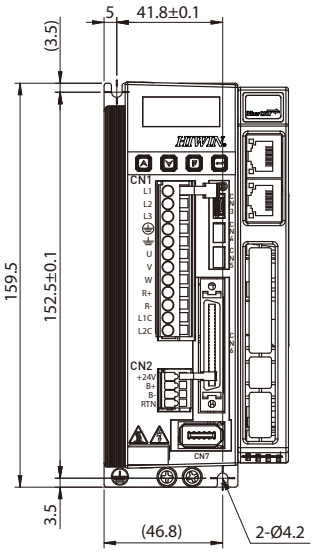

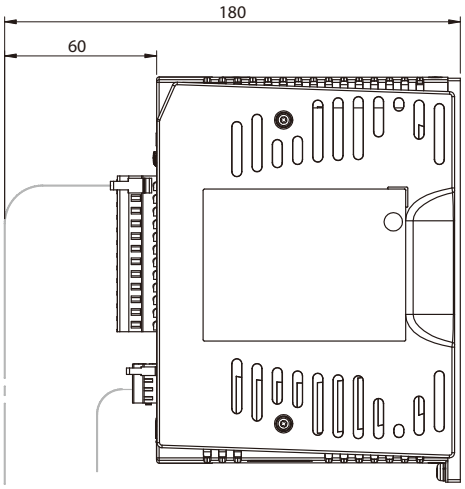

Unit:mm
D2-DNN50B

Frame C (D2x-10xx-E(Note)-Cx)

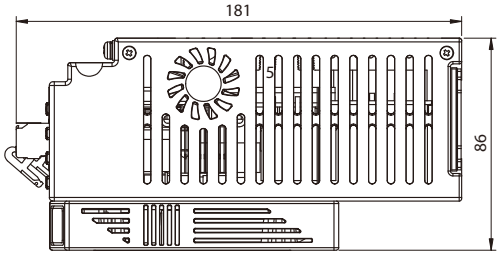

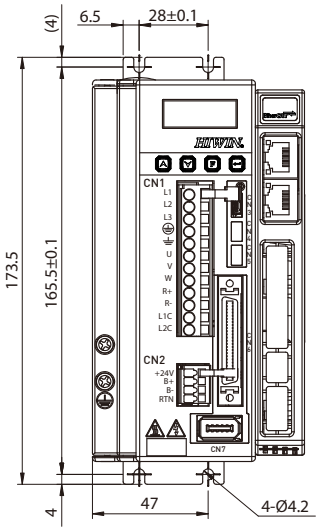

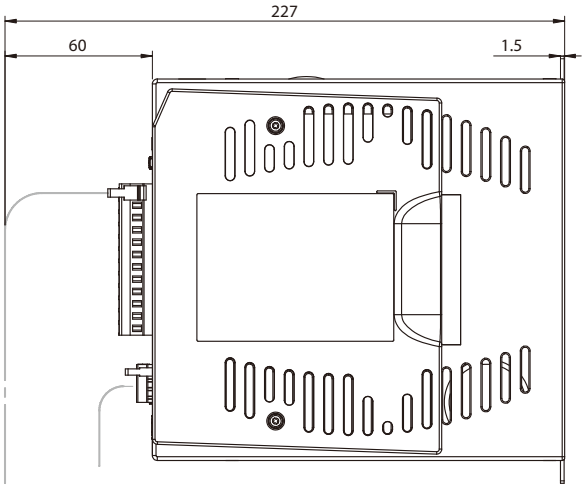

Unit:mm
D2-DNN51B

Frame D (D2x-20xx-E(Note)-Dx)

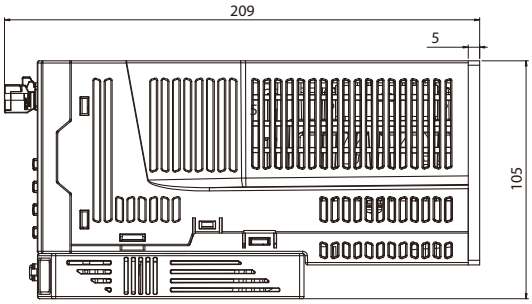

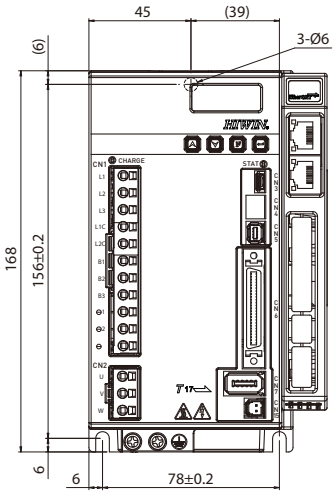

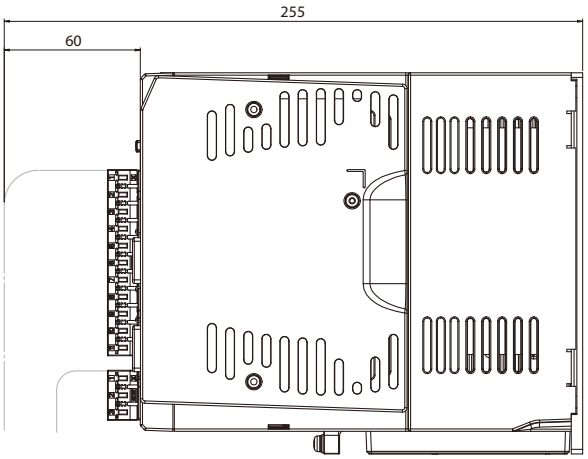

Unit:mm
D2-DNN53A

Note Interface E/F/K/U are plug-in module

10.6.5 Drive peripheral kits

Connector Kit

Part Name	Model	Description		Quantity
Frame A-C	D2-CK3	CN1	Main power, motor power, regenerative resistor and control power connector / 12pins, pitch5mm (051500400249)	1
		CN2	Brake connector: 4pins, pitch 3.5mm (051500400285)	1
		CN6	Control signal connector: 50 pins welded type(051500100127)	1
		CN1	Connector fixture tool (051800400035)	1
		CN2	Connector fixture tool (051800400066)	1
Frame D (with Modbus interface)	D2-CK4	CN1	Connectors of AC power, drive control power, regenerative resistor, and DC reactor. 11 pins, TE 1-2229794-1-PT1.	1
		CN2	Motor power connector. 3 pins, TE 3-22297894-1.	1
		CN4	Connector kit for serial communication. TE 2040008-1.	1
		CN5	Safety function connector. TE 1971153-1.	1
		CN6	Control signal connector. 50 pins, welded type, EUMAX XDR-10350AS.	1
		CN1 CN2	Connector fixture tools: TE 1981045-1.	2
Frame D	D2-CK5	CN1	Connectors of AC power, drive control power, regenerative resistor, and DC reactor. 11 pins, TE 1-2229794-1-PT1.	1
		CN2	Motor power connector. 3 pins,TE 3-22297894-1.	1
		CN5	Safety function connector. TE 1971153-1.	1
		CN6	Control signal connector. 50 pins welded type, EUMAX XDR-10350AS.	1
		CN1 CN2	Connector fixture tools: TE 1981045-1.	2

EMC Accessory Kit

Part Name	Model	Description	Quantity
D2 EMC accessory kit for Single phase	D2-EMC1 (051800200074)	Single phase filter FN2090-6-06 for 50W to 400W (Rated current:6A, leakage current: 0.67mA)	1
		EMI core KCF-130-B	2
	D2-EMC3 (051800200077)	Single phase filter FN2090-10-06 for 750W and 1000W (Rated current:10A, leakage current: 0.67mA)	1
		EMI magnet rings KCF-130-B	2
D2 EMC accessory kit for three phase	D2-EMC2 (051800200075)	Three phase filter FN3025HL-20-71 (Rated current:20A, leakage current:0.4mA)	1
		EMI magnet rings KCF-130-B	2
	D2-EMC4 (051800200078)	Three phase filter B84743C0035R166 (Rated current:35A, leakage current: <0.5mA)	1
		EMI magnet rings KCF-130-B	2

EMI magnetic rings are applied on main power cables, motor power cables, encoder wires or pulse control wires respectively.

1. The leakage current of some models' noise filters is large. Therefore the leakage current will increase due to the ground conditions. When applying leak detectors and leakage circuit breakers, please consider on the basis of ground conditions and noise filters issues how to select. Please contact noise filter manufacturers for details.
2. The filter can be connected to more than one drive if the total maximum load current does not exceed the rated current.

Regenerative Resistor

Part Name	Model	Description	L1	L2	W	H	L
Regenerative resistor	RG1	68Ω Rated power 100W Peak power 500W (050100700001)	165 ± 2	150 ± 2	40 ± 0.5	40 ± 0.5	500
	RG2	120Ω Rated power 300W Peak power 1500W (050100700009)	215 ± 2	200 ± 2	60 ± 0.5	30 ± 0.5	500

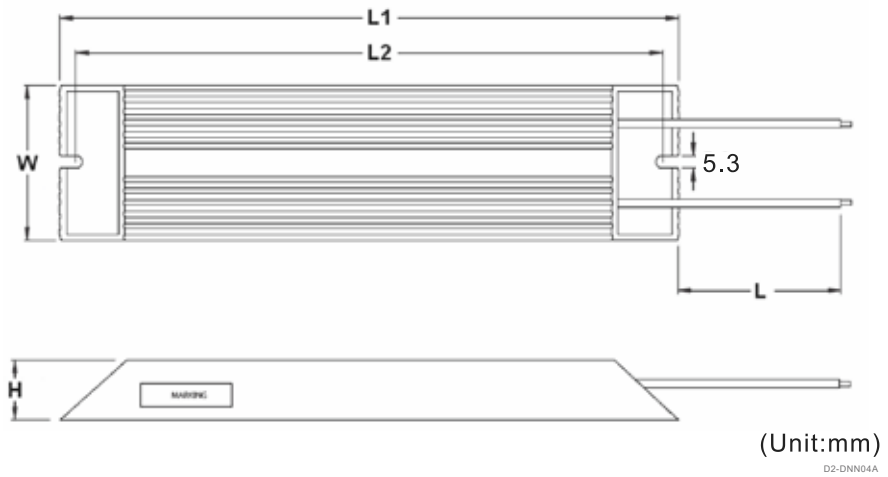

Common Mode Filter

Part Name	Model	Description	Quantity
Common mode filter	MF-CM-S (FF000MF11002)	Common mode inductance: 1100 μH (nominal) for 50W to 2000W (Voltage maximum: 373Vdc, Rated current: 11Arms)	1

DC Reactor

Part Name	Model	Description	Quantity
DC Reactor	B86732G15L712 (051800200126)	1-phase DC reactor for 2000W Rated Voltage : 440Vdc Rated current : 14.2A Inductance: 2.45mH(nominal)	1

10.7 Servo Motor

10.7.1 Motor specifications and application environment

Motor			Rated output (W)	Voltage	Rated speed (No-load maximum speed) (rpm)	Encoder	IP level	Application	Environment
Low Inertia	FRLS	D2-PPN02A	50W	220V	3000 (4500)	13bit/17bit	IP65	Semiconductor Equipment Packaging Machine SMT Machine Food industry machine LCD equipment	■ Storage condition - Indoor illumination - Keep away from following environment a. corrosive gases b. flammable gas c. grease and dirt ■ Application temperature 0 ° C ~ 40 ° C ■ Storage Temperature -15 ° C ~ 70 ° C ■ Humidity 80% RH or less ■ Storage humidity 80% RH or less ■ Elevation above sea level 1000m under ■ Vibration resistance 49m/s^2 or less
		D2-PPN03A	100W						
		D2-PPN04A	200W						
		D2-PPN05A	400W						

Motor			Rated output (W)	Voltage	Rated speed (No-load maximum speed) (rpm)	Encoder	IP level	Application	Environment
Middle inertia	FRMS		50W	220V	3000 (4500)	17bit	IP65	Semiconductor Equipment Packaging Machine SMT Machine Food industry machine LCD equipment	■ Storage condition - Indoor illumination - Keep away from following environment a. corrosive gases b. flammable gas c. grease and dirt ■ Application temperature 0 ° C ~ 40 ° C ■ Storage Temperature -15 ° C ~ 70 ° C ■ Humidity 80% RH or less ■ Storage humidity 80% RH or less ■ Elevation above sea level 1000m under ■ Vibration resistance 49m/s^2 or less
			100W						
			400W						
		 D2-PPN06A	750W			13bit/17bit			
	FRMM	 D2-PPN07A	1000W	220V	2000 (3000)	13bit/17bit		Machine Tools Conveyor Equipment Textile Machine Mechanical arm	
		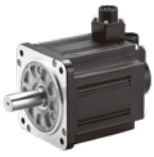 D2-PPN11A	2000W			17bit			

10.7.2 Low inertia, Small capacity

50W

Parameter	Symbol	Unit	FRLS052□□A4□
Drive Input Voltage	V	V	AC220
Rated Power	W	W	50
Rated Torque	Tc	N.m	0.16
Rated Current	Ic	A(rms)	0.9
Peak Max. Torque	Tp	N.m	0.48
Peak Max. Current	Ip	A(rms)	2.7
Rated Speed	ωc	rpm	3000
Max. Speed	ωp	rpm	4500
Torque Constant	Kt	N.m / Arms	0.178
Back EMF Constant	Ke	Vrms / krpm	10.74
Resistance (line to line)	R	Ω	4.7
Inductance (line to line)	L	mH	4.7
Inertia of Rotating Parts (with brake)	J	kg-m²(×10⁻⁴)	0.02(0.022)
Weight (with brake)	M	kg	0.45(0.58)
Motor Insulation Grade	Class A (UL)		
Motor protect	Total enclosed, self-cooled, IP65 (Except for shaft and connector)		
Insulation resistance	10MΩ, DC500V		
Insulation voltage resistance	AC1500V, 60 second		
Brake specifications (Note 1)			
Static friction torque (Minimum)	Tb	N.m	0.3
Magnetizing current	Ab	A	0.25A
Brake input voltage	V	V	DC24±10%
Suction time (Maximum)	to	ms	30
Release time (Maximum)	tr	ms	20

Note1 Brakes are for maintaining object stop. Do not apply for deceleration, dynamic brakeing or emergency stop. Brake suction and release times vary with different circuitries, please note the actual operation delay time during application.

Torque-Speed Curve

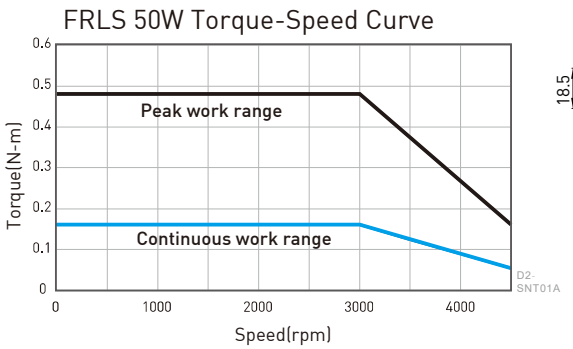

Dimensions

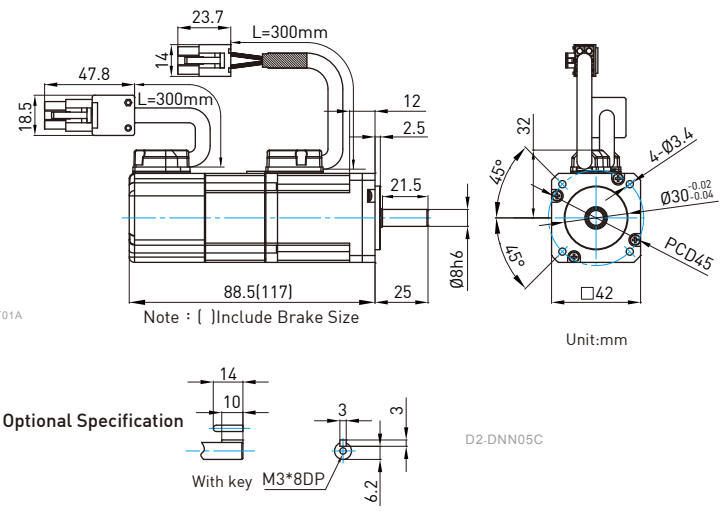

100W

Parameter	Symbol	Unit	FRLS102□□A4□
Drive Input Voltage	V	V	AC220
Rated Power	W	W	100
Rated Torque	Tc	N.m	0.32
Rated Current	Ic	A(rms)	0.9
Peak Max. Torque	Tp	N.m	0.96
Peak Max. Current	Ip	A(rms)	2.7
Rated Speed	ωc	rpm	3000
Max. Speed	ωp	rpm	4500
Torque Constant	Kt	N.m / Arms	0.356
Back EMF Constant	Ke	Vrms / krpm	21.98
Resistance (line to line)	R	Ω	8
Inductance (line to line)	L	mH	8.45
Inertia of Rotating Parts (with brake)	J	kg-m²(×10⁻⁴)	0.036(0.038)
Weight (with brake)	M	kg	0.63(0.76)
Motor Insulation Grade	Class A (UL)		
Motor protect	Total enclosed, self-cooled, IP65 (Except for shaft and connector)		
Insulation resistance	10MΩ, DC500V		
Insulation voltage resistance	AC1500V, 60 second		
Brake specifications (Note 1)			
Static friction torque (Minimum)	Tb	N.m	0.3
Magnetizing current	Ab	A	0.25A
Brake input voltage	V	V	DC24±10%
Suction time (Maximum)	to	ms	30
Release time (Maximum)	tr	ms	20

Note1 Brakes are for maintaining object stop. Do not apply for deceleration, dynamic brakeing or emergency stop.
Brake suction and release times vary with different circuitries, please note the actual operation delay time during application.

Torque-Speed Curve

FRLS 100W Torque-Speed Curve

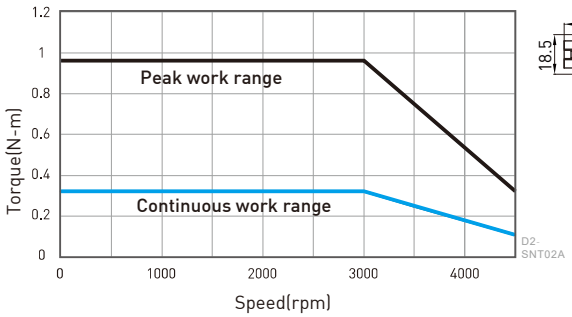

Dimensions

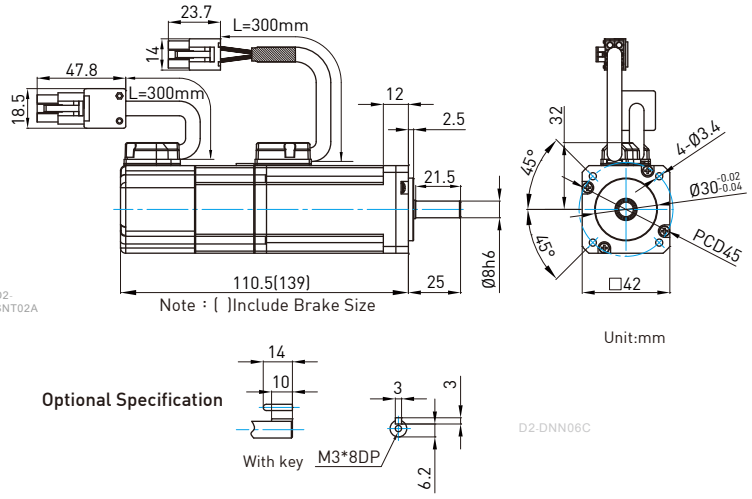

200W

Parameter	Symbol	Unit	FRLS202□□06□
Drive Input Voltage	V	V	AC220
Rated Power	W	W	200
Rated Torque	Tc	N.m	0.64
Rated Current	Ic	A(rms)	1.7
Peak Max. Torque	Tp	N.m	1.92
Peak Max. Current	Ip	A(rms)	5.1
Rated Speed	ωc	rpm	3000
Max. Speed	ωp	rpm	4500
Torque Constant	Kt	N.m / Arms	0.38
Back EMF Constant	Ke	Vrms / krpm	23
Resistance (line to line)	R	Ω	4.3
Inductance (line to line)	L	mH	13
Inertia of Rotating Parts (with brake)	J	kg-m²(×10⁻⁴)	0.17(0.21)
Weight (with brake)	M	kg	0.95(1.5)
Motor Insulation Grade	Class A (UL)		
Motor protect	Total enclosed, self-cooled, IP65 (Except for shaft and connector)		
Insulation resistance	10MΩ, DC500V		
Insulation voltage resistance	AC1500V, 60 second		
Brake specifications (Note 1)			
Static friction torque (Minimum)	Tb	N.m	1.3
Magnetizing current	Ab	A	0.32A
Brake input voltage	V	V	DC24±10%
Suction time (Maximum)	to	ms	30
Release time (Maximum)	tr	ms	20

Note1 Brakes are for maintaining object stop. Do not apply for deceleration, dynamic brakeing or emergency stop.
Brake suction and release times vary with different circuitries, please note the actual operation delay time during application.

Torque-Speed Curve

FRLS 200W Torque-Speed Curve

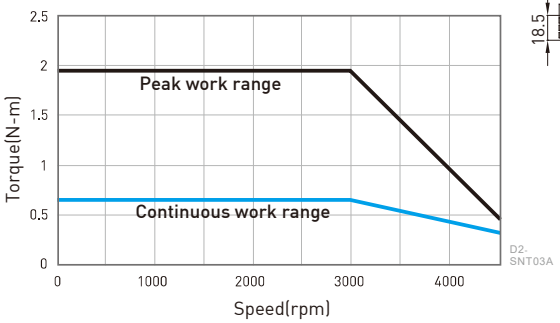

Dimensions

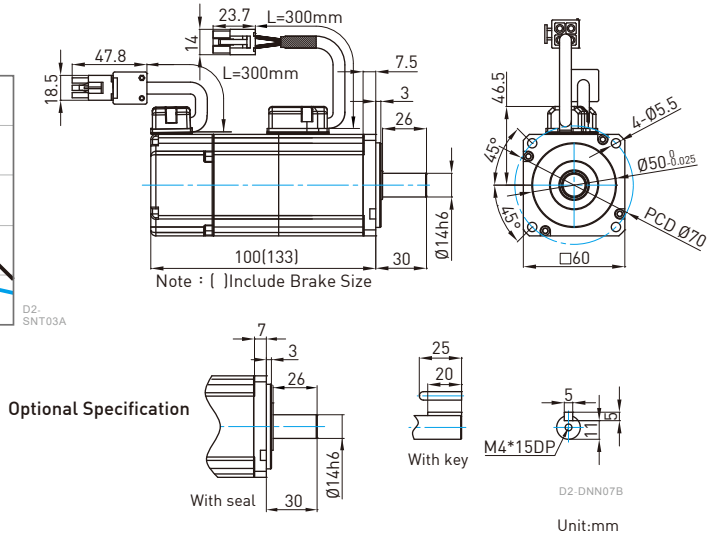

400W

Parameter	Symbol	Unit	FRLS402□□06□
Drive Input Voltage	V	V	AC220
Rated Power	W	W	400
Rated Torque	Tc	N.m	1.27
Rated Current	Ic	A(rms)	2.5
Peak Max. Torque	Tp	N.m	3.81
Peak Max. Current	Ip	A(rms)	7.5
Rated Speed	ωc	rpm	3000
Max. Speed	ωp	rpm	4500
Torque Constant	Kt	N.m / Arms	0.51
Back EMF Constant	Ke	Vrms / krpm	31.9
Resistance (line to line)	R	Ω	3.5
Inductance (line to line)	L	mH	13
Inertia of Rotating Parts (with brake)	J	kg-m²(×10⁻⁴)	0.27 (0.31)
Weight (with brake)	M	kg	1.31(1.86)
Motor Insulation Grade	Class A (UL)		
Motor protect	Total enclosed, self-cooled, IP65 (Except for shaft and connector)		
Insulation resistance	10MΩ, DC500V		
Insulation voltage resistance	AC1500V, 60 second		
Brake specifications (Note 1)			
Static friction torque (Minimum)	Tb	N.m	1.3
Magnetizing current	Ab	A	0.32A
Brake input voltage	V	V	DC24±10%
Suction time (Maximum)	to	ms	30
Release time (Maximum)	tr	ms	20

Note1 Brakes are for maintaining object stop. Do not apply for deceleration, dynamic brakeing or emergency stop.
Brake suction and release times vary with different circuitries, please note the actual operation delay time during application.

Torque-Speed Curve

FRLS 400W Torque-Speed Curve

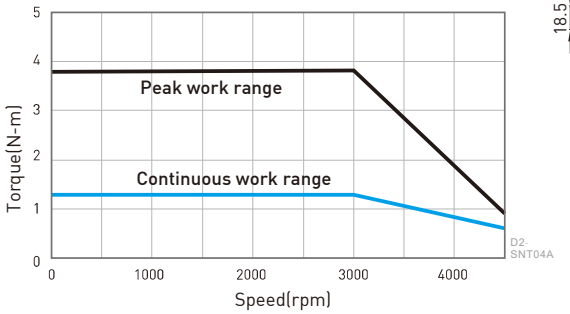

Dimensions

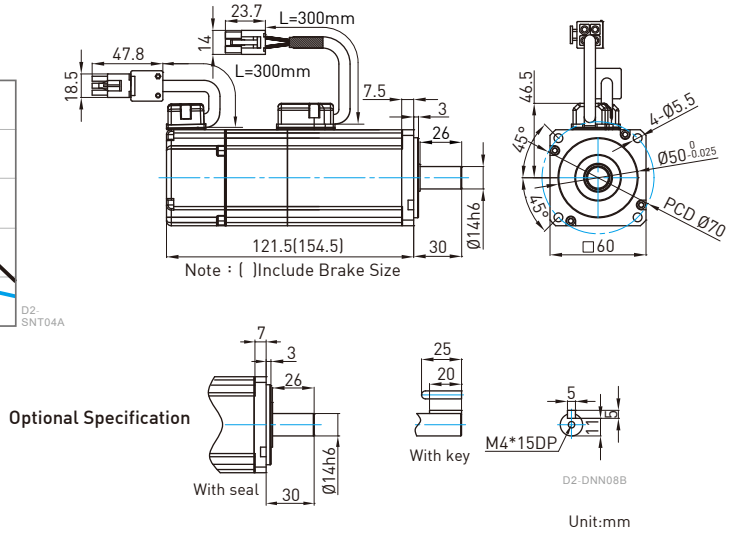

10.7.3 Middle inertia, Small capacity

50W

Parameter	Symbol	Unit	FRMS052□□04□
Drive Input Voltage	V	V	AC220
Rated Power	W	W	50
Rated Torque	Tc	N.m	0.16
Rated Current	Ic	A(rms)	0.9
Peak Max. Torque	Tp	N.m	0.48
Peak Max. Current	Ip	A(rms)	2.7
Rated Speed	ωc	rpm	3000
Max. Speed	ωp	rpm	4500
Torque Constant	Kt	N.m / Arms	0.178
Back EMF Constant	Ke	Vrms / krpm	11.51
Resistance (line to line)	R	Ω	13.17
Inductance (line to line)	L	mH	11.75
Inertia of Rotating Parts (with brake)	J	kg-m²(×10⁻⁴)	0.025(0.027)
Weight (with brake)	M	kg	0.38(0.51)
Motor Insulation Grade	Class A (UL)		
Motor protect	Total enclosed, self-cooled, IP65 (Except for shaft and connector)		
Insulation resistance	10MΩ, DC500V		
Insulation voltage resistance	AC1500V, 60 second		
Brake specifications (Note 1)			
Static friction torque (Minimum)	Tb	N.m	0.32
Magnetizing current	Ab	A	0.25A
Brake input voltage	V	V	DC24±10%
Suction time (Maximum)	to	ms	40
Release time (Maximum)	tr	ms	20

Note1 Brakes are for maintaining object stop. Do not apply for deceleration, dynamic brakeing or emergency stop. Brake suction and release times vary with different circuitries, please note the actual operation delay time during application.

Torque-Speed Curve

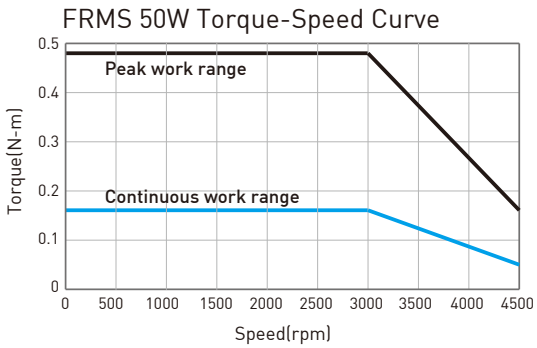

Dimensions

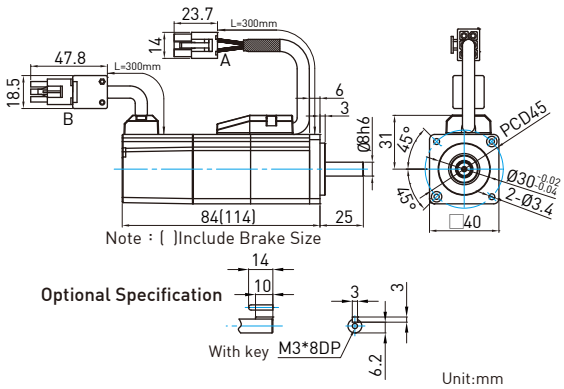

100W

Parameter	Symbol	Unit	FRMS102□□04□
Drive Input Voltage	V	V	AC220
Rated Power	W	W	100
Rated Torque	Tc	N.m	0.32
Rated Current	Ic	A(rms)	0.9
Peak Max. Torque	Tp	N.m	0.96
Peak Max. Current	Ip	A(rms)	2.7
Rated Speed	ωc	rpm	3000
Max. Speed	ωp	rpm	4500
Torque Constant	Kt	N.m / Arms	0.356
Back EMF Constant	Ke	Vrms / krpm	20.93
Resistance (line to line)	R	Ω	19
Inductance (line to line)	L	mH	23.78
Inertia of Rotating Parts (with brake)	J	kg-m²(×10⁻⁴)	0.051(0.055)
Weight (with brake)	M	kg	0.54(0.67)
Motor Insulation Grade	Class A (UL)		
Motor protect	Total enclosed, self-cooled, IP65 (Except for shaft and connector)		
Insulation resistance	10MΩ, DC500V		
Insulation voltage resistance	AC1500V, 60 second		
Brake specifications (Note 1)			
Static friction torque (Minimum)	Tb	N.m	0.32
Magnetizing current	Ab	A	0.25A
Brake input voltage	V	V	DC24±10%
Suction time (Maximum)	to	ms	40
Release time (Maximum)	tr	ms	20

Note1 Brakes are for maintaining object stop. Do not apply for deceleration, dynamic brakeing or emergency stop.
Brake suction and release times vary with different circuitries, please note the actual operation delay time during application.

Torque-Speed Curve

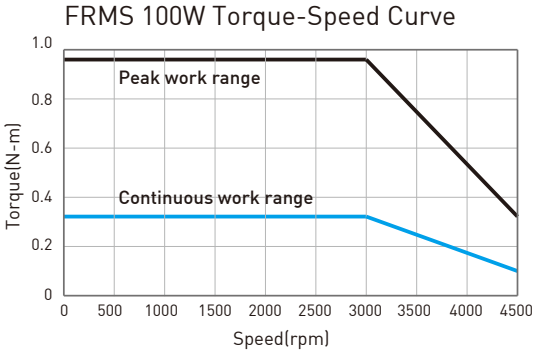

Dimensions

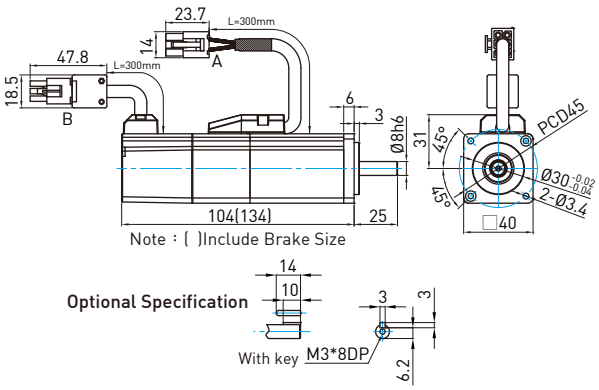

Unit:mm

400W

Parameter	Symbol	Unit	FRMS4B2□□06□
Drive Input Voltage	V	V	AC220
Rated Power	W	W	400
Rated Torque	Tc	N.m	1.27
Rated Current	Ic	A(rms)	2.6
Peak Max. Torque	Tp	N.m	3.81
Peak Max. Current	Ip	A(rms)	7.8
Rated Speed	ωc	rpm	3000
Max. Speed	ωp	rpm	4500
Torque Constant	Kt	N.m / Arms	0.48
Back EMF Constant	Ke	Vrms / krpm	29.61
Resistance (line to line)	R	Ω	4.13
Inductance (line to line)	L	mH	9.9
Inertia of Rotating Parts (with brake)	J	kg-m²(×10⁻⁴)	0.44(0.48)
Weight (with brake)	M	kg	1.31(1.86)
Motor Insulation Grade	Class A (UL)		
Motor protect	Total enclosed, self-cooled, IP65 (Except for shaft and connector)		
Insulation resistance	10MΩ, DC500V		
Insulation voltage resistance	AC1500V, 60 second		
Brake specifications (Note 1)			
Static friction torque (Minimum)	Tb	N.m	1.3
Magnetizing current	Ab	A	0.32
Brake input voltage	V	V	DC24±10%
Suction time (Maximum)	to	ms	30
Release time (Maximum)	tr	ms	20

Note1 Brakes are for maintaining object stop. Do not apply for deceleration, dynamic brakeing or emergency stop.
Brake suction and release times vary with different circuitries, please note the actual operation delay time during application.

Torque-Speed Curve

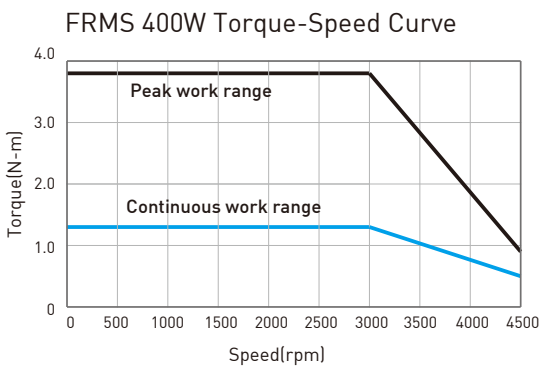

Dimensions

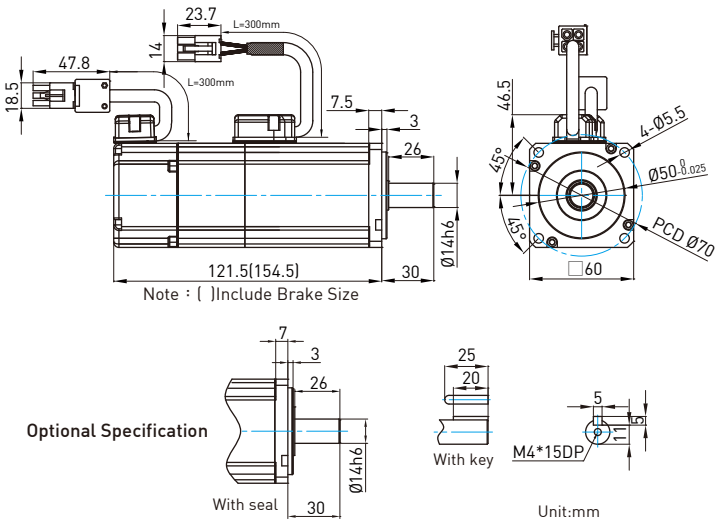

750W

Parameter	Symbol	Unit	FRMS752□□08□
Drive Input Voltage	V	V	AC220
Rated Power	W	W	750
Rated Torque	Tc	N.m	2.4
Rated Current	Ic	A(rms)	5.1
Peak Max. Torque	Tp	N.m	7.2
Peak Max. Current	Ip	A(rms)	15.3
Rated Speed	ωc	rpm	3000
Max. Speed	ωp	rpm	4500
Torque Constant	Kt	N.m / Arms	0.47
Back EMF Constant	Ke	Vrms / krpm	28.4
Resistance (line to line)	R	Ω	0.813
Inductance (line to line)	L	mH	3.4
Inertia of Rotating Parts (with brake)	J	kg-m²(×10⁻⁴)	1.4(1.46)
Weight (with brake)	M	kg	2.66(3.32)
Motor Insulation Grade	Class A (UL)		
Motor protect	Total enclosed, self-cooled, IP65 (Except for shaft and connector)		
Insulation resistance	10MΩ, DC500V		
Insulation voltage resistance	AC1500V, 60 second		
Brake specifications (Note 1)			
Static friction torque (Minimum)	Tb	N.m	2.4
Magnetizing current	Ab	A	0.358A
Brake input voltage	V	V	DC24±10%
Suction time (Maximum)	to	ms	45
Release time (Maximum)	tr	ms	10

Note1 Brakes are for maintaining object stop. Do not apply for deceleration, dynamic brakeing or emergency stop. Brake suction and release times vary with different circuitries, please note the actual operation delay time during application.

Torque-Speed Curve

FRMS 750W Torque-Speed Curve

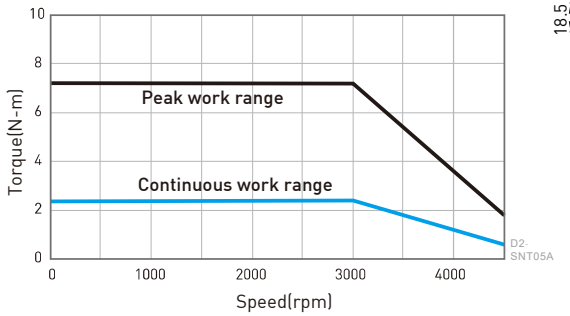

Dimensions

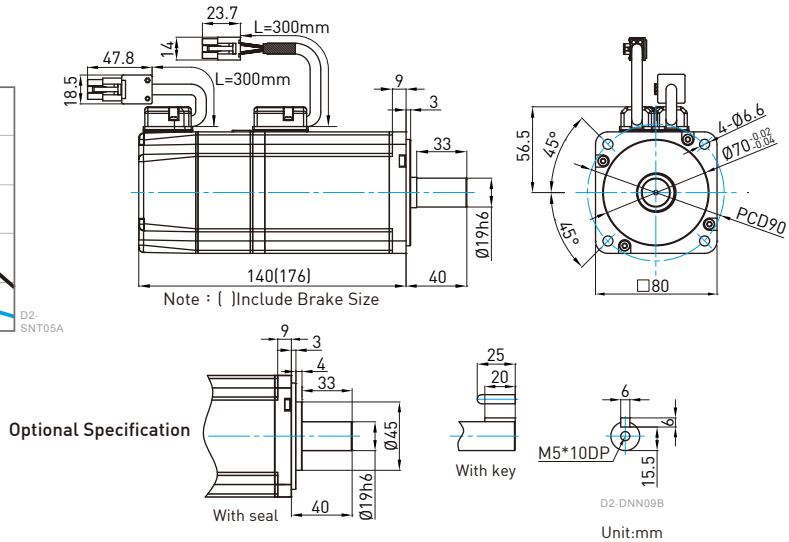

10.7.4 Middle inertia, Middle capacity

1000W

Parameter	Symbol	Unit	FRMM1K2□□13□
Drive Input Voltage	V	V	AC220
Rated Power	W	W	1000
Rated Torque	Tc	N.m	4.77
Rated Current	Ic	A(rms)	5.1
Peak Max. Torque	Tp	N.m	14.3
Peak Max. Current	Ip	A(rms)	15.3
Rated Speed	ωc	rpm	2000
Max. Speed	ωp	rpm	3000
Torque Constant	Kt	N.m / Arms	0.94
Back EMF Constant	Ke	Vrms / krpm	54.7
Resistance (line to line)	R	Ω	0.81
Inductance (line to line)	L	mH	8
Inertia of Rotating Parts (with brake)	J	kg-m²(×10⁻⁴)	7.6(8.7)
Weight (with brake)	M	kg	5.4(6.2)
Motor Insulation Grade	Class A (UL)		
Motor protect	Total enclosed, self-cooled, IP65 (Except for shaft and connector)		
Insulation resistance	10MΩ, DC500V		
Insulation voltage resistance	AC1500V, 60 second		
Brake specifications (Note 1)			
Static friction torque (Minimum)	Tb	N.m	10
Magnetizing current	Ab	A	0.56A
Brake input voltage	V	V	DC24
Suction time (Maximum)	to	ms	80
Release time (Maximum)	tr	ms	30

Note1 Brakes are for maintaining object stop. Do not apply for deceleration, dynamic brakeing or emergency stop.
Brake suction and release times vary with different circuitries, please note the actual operation delay time during application.

■ Torque-Speed Curve

FRMM 1000W Torque-Speed Curve

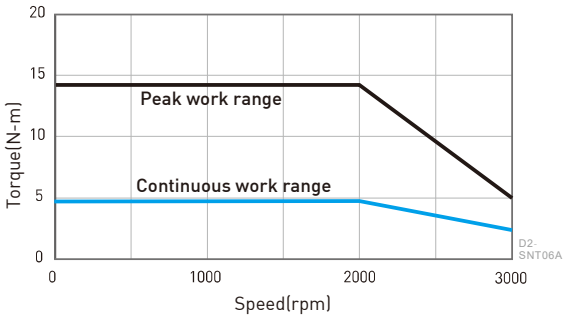

■ Dimensions

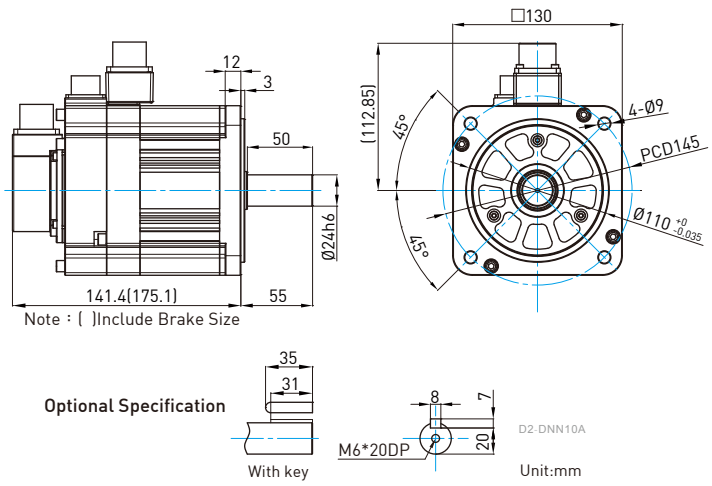

2000W

Parameter	Symbol	Unit	FRMM2K2□□13□
Drive Input Voltage	V	V	AC220
Rated Power	W	W	2000
Rated Torque	Tc	N.m	9.55
Rated Current	Ic	A(rms)	11
Peak Max. Torque	Tp	N.m	28.65
Peak Max. Current	Ip	A(rms)	33
Rated Speed	ωc	rpm	2000
Max. Speed	ωp	rpm	3000
Torque Constant	Kt	N.m / Arms	0.87
Back EMF Constant	Ke	Vrms / krpm	57.8
Resistance (line to line)	R	Ω	0.41
Inductance (line to line)	L	mH	3.7
Inertia of Rotating Parts (with brake)	J	kg-m²(×10⁻⁴)	13(14.1)
Weight (with brake)	M	kg	8(8.8)
Motor Insulation Grade	Class A (under certification)		
Motor protect	Total enclosed, self-cooled, IP65 (Except for shaft and connector)		
Insulation resistance	10MΩ, DC500V		
Insulation voltage resistance	AC1500V, 60 second		
Brake specifications (Note 1)			
Static friction torque (Minimum)	Tb	N.m	10
Magnetizing current	Ab	A	0.56A
Brake input voltage	V	V	DC24
Suction time	to	ms	80
Release time	tr	ms	30

Note1 Brakes are for maintaining object stop. Do not apply for deceleration, dynamic brakeing or emergency stop.
Brake suction and release times vary with different circuitries, please note the actual operation delay time during application.

Torque-Speed Curve

FRMM 2000W Torque-Speed Curve

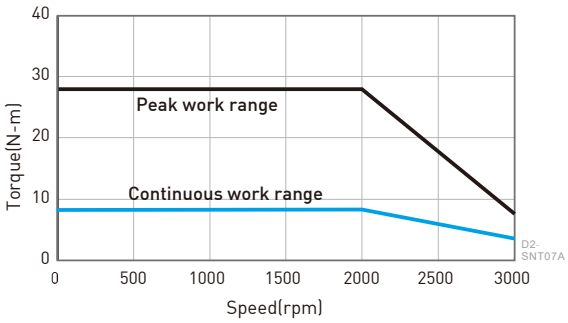

Dimensions

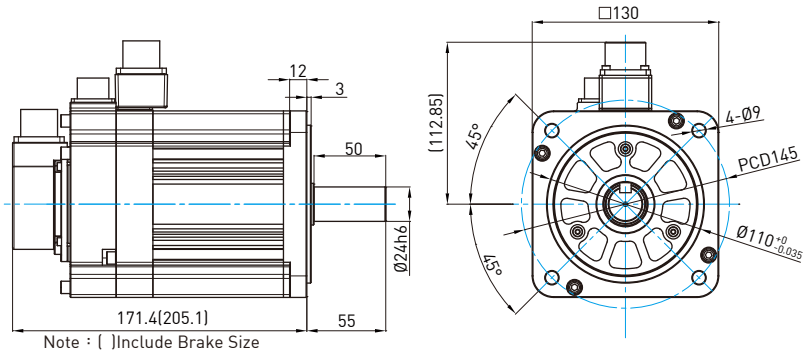

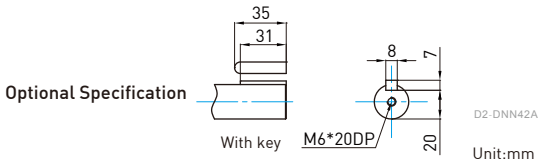

10.8 Cable and connector

10.8.1 Cable

■ Small Capacity

Name	Type	Connect	Description : 50W~750W
AC Servo Motor Power Cable	HVPS04AA□□□B	CN1	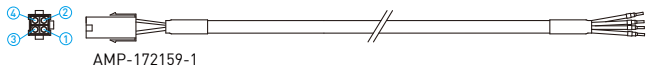
AC Servo Motor Power and Brake Extension Cable	HVPS06AA□□□B	CN1 CN2	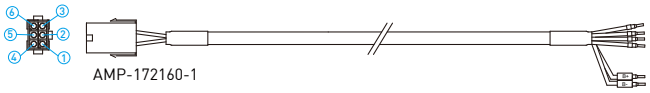
AC Servo Motor Encoder Cable (13bit incremental)	HVE13IAB□□□B	CN7	
AC Servo Motor Encoder Cable (17bit incremental)	HVE17IAB□□□B		
AC Servo Motor Encoder Cable (17bit absolute)	HVE17AAB□□□B		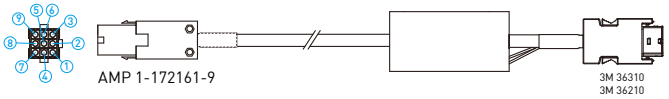

Middle Capacity — 1000W

Name	Type	Connect	Description : 1000W
AC Servo Motor Power Cable	HVPM04BA□□□B Straight Connector	CN1	
	HVPM04CA□□□B L-Type Connector		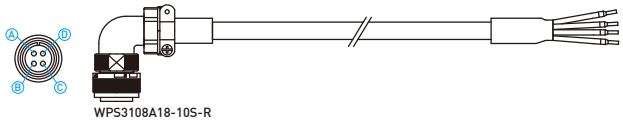
AC Servo Motor Power Cable and Brake Cable (Note1)	HVPM06BA□□□B Straight Connector	CN1	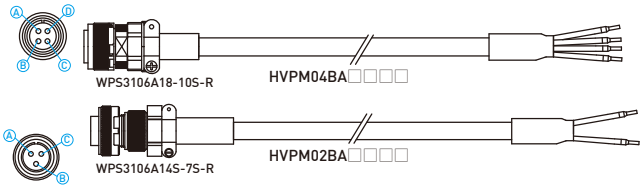
	HVPM06CA□□□B L-Type Connector		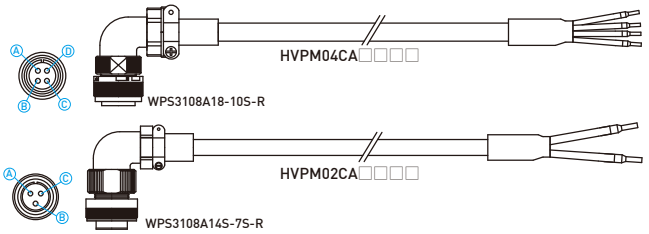
AC Servo Motor Encoder Cable (13bit Incremental)	HVE13IBB□□□B Straight Connector	CN7	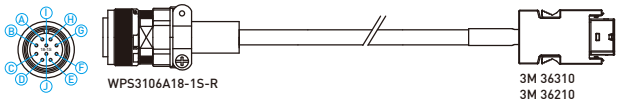
	HVE13ICB□□□B L-Type Connector		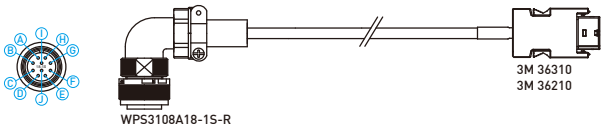
AC Servo Motor Encoder Cable (17bit incremental)	HVE17IBB□□□B Straight Connector		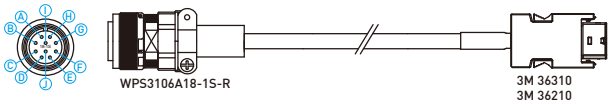
	HVE17ICB□□□B L-Type Connector		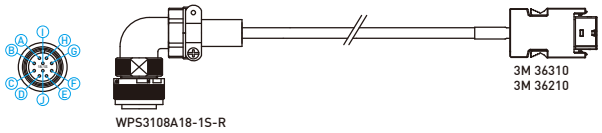
AC Servo Motor Encoder Cable (17bit absolute)	HVE17ABB□□□B Straight Connector		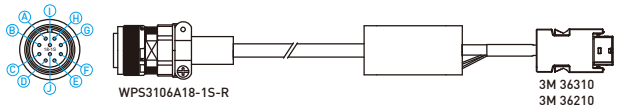
	HVE17ACB□□□B L-Type Connector		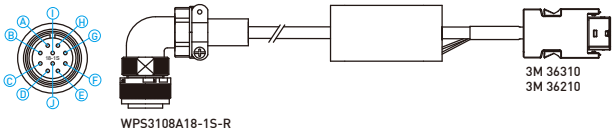

Note1 For middle capacity motors with brake, please remember to use power cable and brake cable simultaneously.

Middle Capacity — 2000W

Name	Type	Connect	Description : 2000W
AC Servo Motor Power Cable	HVPM04BB□□□B Straight Connector	CN1	
	HVPM04CB□□□B L-Type Connector		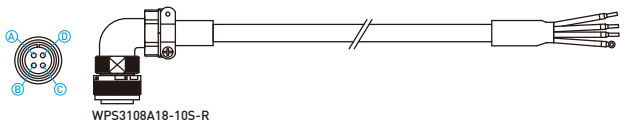
AC Servo Motor Power Cable and Brake Cable (Note1)	HVPM06BB□□□B Straight Connector	CN1	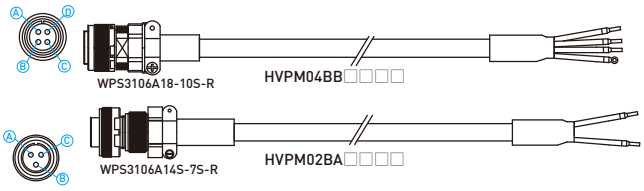
	HVPM06CB□□□B L-Type Connector		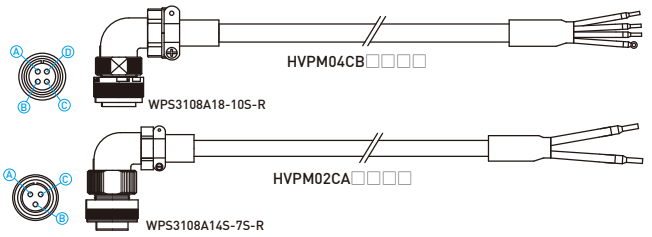
AC Servo Motor Encoder Cable (17bit incremental)	HVE17IBB□□□B Straight Connector	CN7	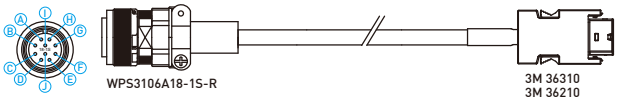
	HVE17ICB□□□B L-Type Connector		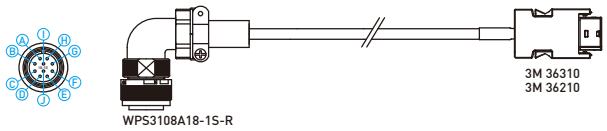
AC Servo Motor Encoder Cable (17bit absolute)	HVE17ABB□□□B Straight Connector		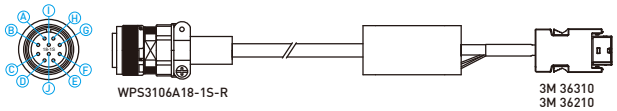
	HVE17ACB□□□B L-Type Connector		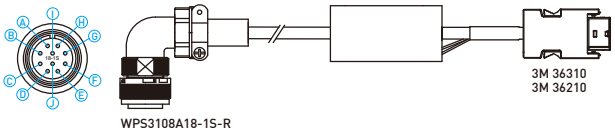
	HE00817DR300(3m)		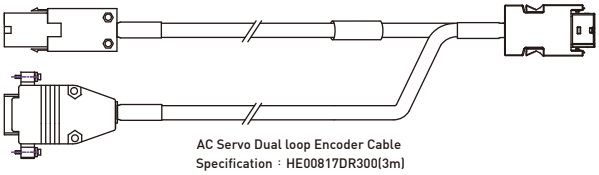

Note1 For middle capacity motors with brake, please remember to use power cable and brake cable simultaneously.

Communication and Interface Cable

Name	Type	Connect	
Mini USB Cable	051700800366	CN3	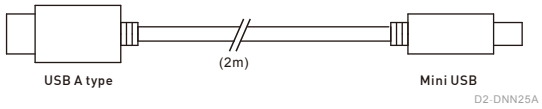
	HE00834S0800(0.3m)	CN4 / CN5	
	HE00834S0900(1m)		
	HE00834S1000(2m)		
	HE00834S1100(3m)		
Interface Cable	HE00815AC200	CN6	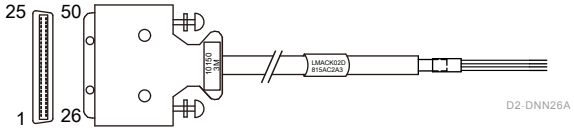
IO Extension Cable	HE00834S1200(3m)	CN6	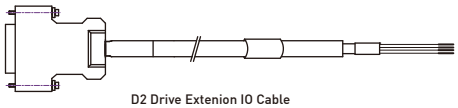

10.8.2 Connector

Small Capacity Series 50W~750W	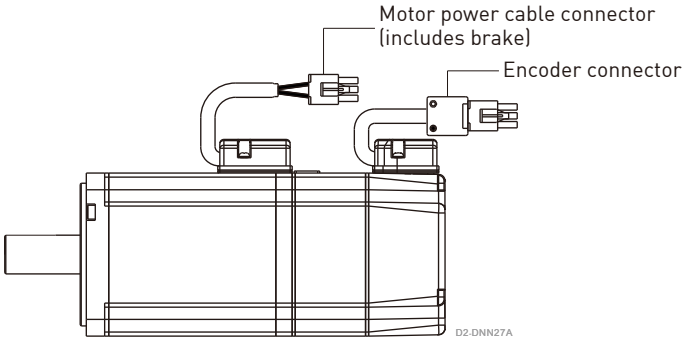
Middle Capacity Series 1000W/2000W	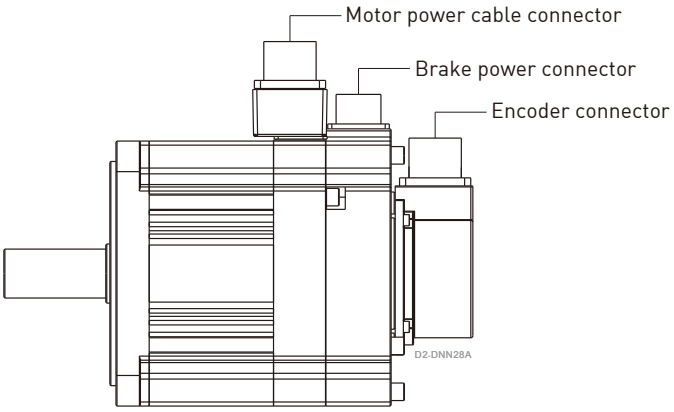

Motor Power Connector

Small Capacity Series / 50W~750W

Signal	AMP-172167-1 (without brake)	AMP-172168-1 (with brake)
U	3	3
V	2	2
W	1	1
GND	4	4
B+	--	5
B-	--	6

Connect Pins Position Definition

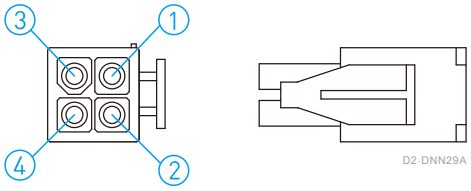

(without brake)

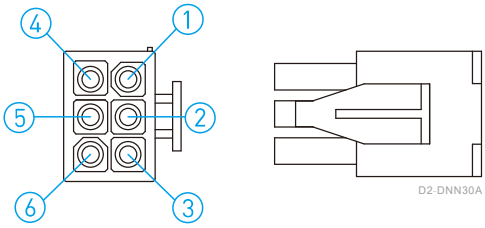

(with brake)

Middle Capacity Series /1000W · 2000W

Signal	WPS3102A18-10P-R	WPS3102A14S-7P-R
U	A	--
V	B	--
W	C	--
GND	D	--
B+	--	A
B-	--	C

Connect Pins Position Definition

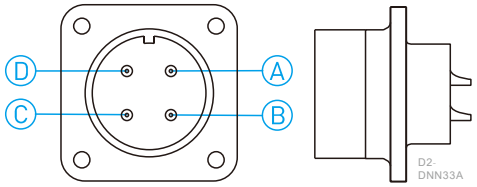

WPS3102A18-10P-R

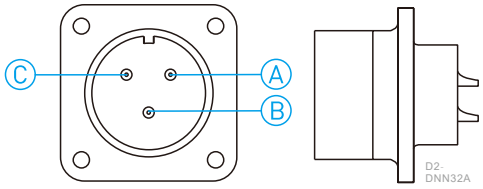

WPS3102A14S-7P-R

By brake Type, two connectors must be used simultaneously

Encoder Connector

13bit Incremental / 50W~750W

Function	Signal		AMP-172169-1
Power	5V±5%		1
	0V		2
Incremental Signal/ Hall signal	A+	U+	3
	A-	U-	4
	B+	V+	5
	B-	V-	6
	Z+	W+	7
	Z-	W-	8
Shielding	Shielding		9

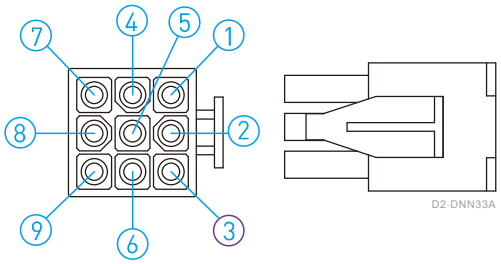

13bit Incremental / 1000W

Function	Signal		WPS3102A18-1P-R
Power	5V±5%		A
	0V		B
Incremental Signal/ Hall signal	A+	U+	C
	A-	U-	D
	B+	V+	E
	B-	V-	F
	Z+	W+	G
	Z-	W-	H
Shielding	Shielding		I

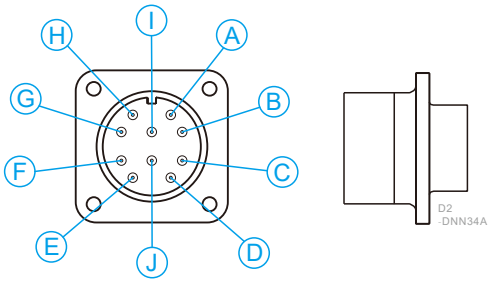

17bit incremental / 50W~750W

Function	Signal	AMP1-172169-9
Power	5V±5%	1
	0V	2
Serial Data Signal	SL+	3
	SL-	4
	MA+	7
	MA-	8
Shielding	Shielding	9

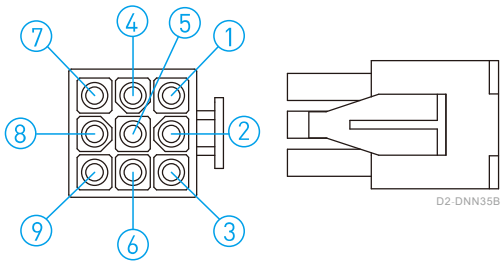

17bit incremental / 1000W · 2000W

Function	Signal	WPS3102A18-1P-R
Power	5V±5%	A
	0V	B
Serial Data Signal	SL+	C
	SL-	D
	MA+	G
	MA-	H
Shielding	Shielding	I

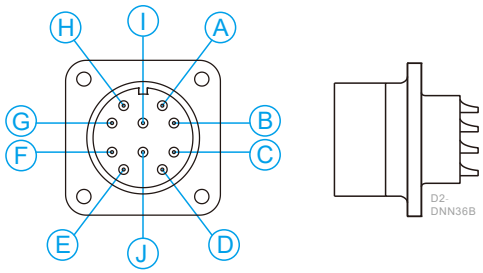

17bit absolute / 50W~750W

Function	Signal	AMP-1-172169-9
Power	5V	1
	0V	2
Battery	VB	5
	GND	6
Serial Data Signal	SD+	7
	SD-	8
Shielding	Shielding	9

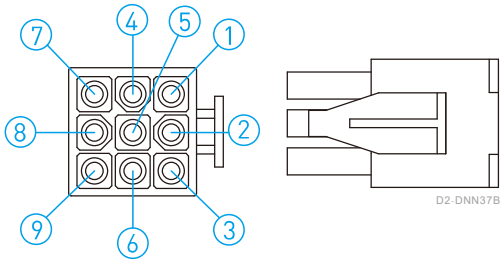

17bit absolute / 1000W · 2000W

Function	Signal	WPS3102A18-1P-R
Power	5V	A
	0V	B
Battery	VB	E
	GND	F
Serial Data Signal	SD+	G
	SD-	H
Shielding	Shielding	I

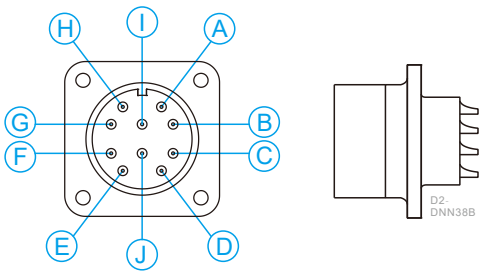

10.9 HIWIN Single-axis robot and motor adaptor flange

AC Servo Motor		HIWIN Single-axis robot							Drive
		KK40	KK50	KK60	KK80	KK86	KK100	KK130	
50W	FRLS052XXA4X	F2	F2	F2	F3	F3	F1	-	D2x-01xx-x-Ax
100W	FRLS102XXA4X	F2	F2	F2	F3	F3	-	-	D2x-01xx-x-Ax
200W	FRLS202XX06X	-	-	-	F0	F0	F0	F1	D2x-04xx-x-Bx
400W	FRLS402XX06X	-	-	-	F0	F0	F0	F1	D2x-04xx-x-Bx
750W	FRMS752XX08X	-	-	-	-	-	F1	F2	D2x-10xx-x-Cx

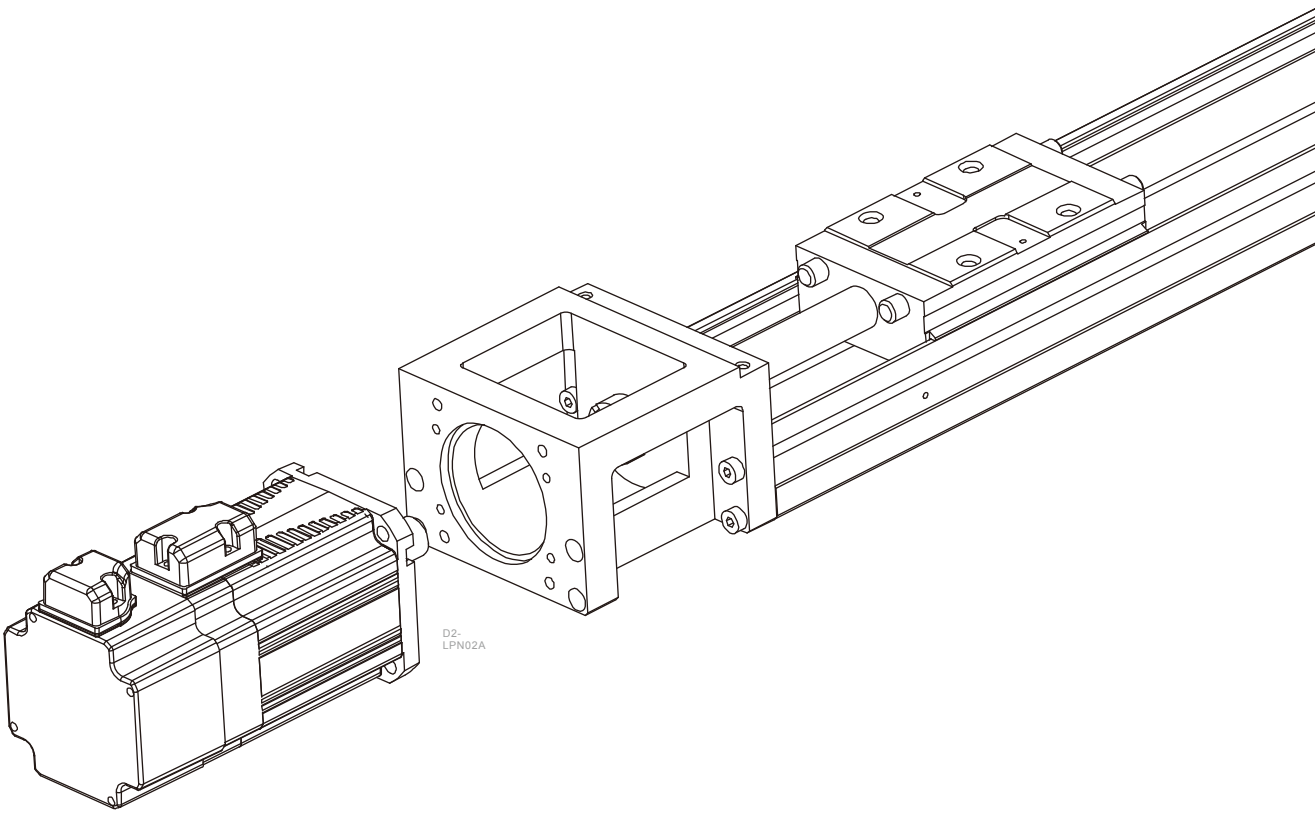

10.10 Servo Motor Selection Guide

The motor selection guide in this chapter is located on-line at
http://www.hiwinmikro.tw/hiwincal.aspx

1. Definition of mechanism to be driven by the motor.

Define detailed dimentions of individual mechanical components (ex: ball screw length, lead and pulley diameter)
Typical servo mechanisms are listed as follows:
[Ball screw mechanism]
[Belt mechanism]
[Rack and pinion mechanism]
[Reduction gear mechanism]

2. Definition of operating pattern (motion velocity profile).

The operating pattern can be defined by the following parameters: acceleration/deceleration time, constant-velocity time, stop time, cycle time, travel distance.

3. Calculation of load inertia and motor inertia ratio.

Calculate load inertia for each mechanical component. (Refer to "General inertia calculation method" described later.)
Then, divide the calculated load inertia by the inertia of the selected motor then check the inertia ratio. Note that the ratio should less than 10, if the selected motor is less than 750W. If the power of selected motor is higher than 1000W, the ratio should less than 10.

4. Calculation of motor velocity.

Calculate the motor velocity from the moving distance, acceleration/deceleration time and constant-velocity time.

5. Calculation of torque.

Calculate the required motor torque from the load inertia, acceleration/deceleration time and constant-velocity time.

6. Calculation of motor

Select a motor that meets the above 3 to 5 requirements.

10.10.1 Introduction of motor selection relevant parameters

Peak torque

Peak torque indicates the maximum torque that the motor requires during operation (mainly in acceleration and deceleration steps). The reference value is 80% or less of the maximum motor torque. If the torque is a negative value, a regenerative discharge resistor may be required.

Traveling torque, stop holding torque

Traveling torque indicates the torque that the motor requires for a long time. Stop holding torque indicates that the amount of torque required for a motor to remain in a fixed position.
Traveling torque calculation formula for each mechanism.

List of symbol：
W：Workpiece weight [kg]
B_P：Lead [m]
D：Pulley diameter [m]
F：External force [N]
B_{eff}： Mechanical efficiency
μ ：Coefficient of friction
g: Acceleration of gravity 9.8[m/s^2]

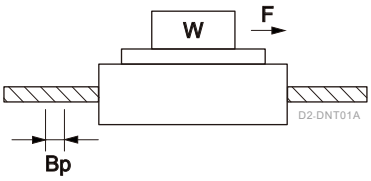

Traveling torque

$$T_f = \frac{B_P}{2\pi B_{eff}}(\mu gW + F)$$

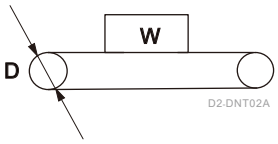

Traveling torque

$$T_f = \frac{D}{2\pi B_{eff}}(\mu gW + F)$$

Effective torque

Effective torque indicates a root-mean- square value of the total required for running and stopping the motor per unit time. The reference value is approximate 80% or less of the rated motor torque.

$$T_{rms} = \sqrt{\frac{T_a^2 \times t_a + T_f^2 \times t_b + T_d^2 \times t_d}{t_c}}$$

T_a: Acceleration torque [N-m]
T_f: Traveling torque [N-m]
T_d: Deceleration torque [N-m]
t_c: Cycle time [s] (Run time + Stop time)

t_a: Acceleration time [s]
t_b: constant-velocity time [s]
t_d: Deceleration time [s]

Motor velocity

Maximum velocity of motor in operation: The reference value is the rated velocity or lower value. When the motor operates at the maximum velocity, you must pay attention to the motor torque and temperature rise.

Load inertia and motor inertia ratio

Inertia is like the force to retain the current moving condition. Inertia ration is calculated by dividing load inertia by rotor inertia. Generally, for motor with 750W or lower capacity, the inertia ratio should be “10” or less. For motor with 1000W or higher capacity, the inertia ratio should be “10” or less. If the system need quicker response, a lower inertia ratio is required.

10.10.2 General inertia calculation for various rigid objects of uniform composition

Shape	J calculation formula	Shape	J calculation formula
Disk 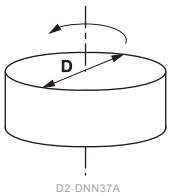 D2-DNN37A	$J=\frac{1}{8}MD^2$	Separated rod 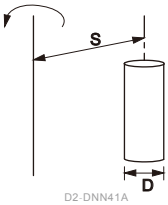 D2-DNN41A	$J=\frac{1}{8}MD^2+M\,S^2$
Solid cylinder 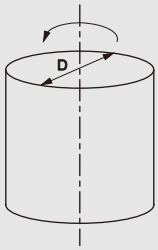 D2-DNN38A	$J=\frac{1}{8}MD^2$	Straight rod 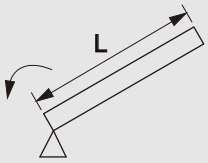 D2-DNN42A	$J=\frac{1}{3}ML^2$
Hollow cylinder 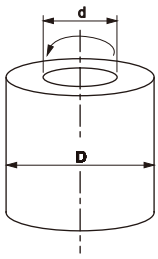 D2-DNN39A	$J=\frac{1}{8}M(D^2+d^2)$	Prism 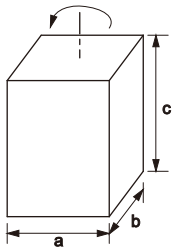 D2-DNN43A	$J=\frac{1}{12}M(a^2+b^2)$
Uniform rod 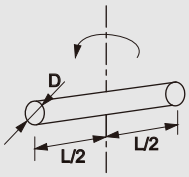 D2-DNN40A	$J=\frac{1}{48}M(3D^2+4L^2)$		

List of symbol：
J : Inertia [kg-m^2]
M : Mass [kg]
D : Outer diameter [m]
d : Inner diameter [m]
L : Length [m]
a, b, c : Side length [m]
S : Distance [m]

If mass (M [kg]) is unknown, calculate it with the following formula：
Mass M[kg] = Density ρ [kg/m^3] x Volume V[m^3]
Density of each material
Iron ρ = 7.9 x 10^3 [kg/m^3]
Brass ρ = 8.5 x 10^3 [kg/m^3]
Aluminum ρ = 2.8 x 10^3 [kg/m^3]

10.10.3 Equivalent inertia calculation for mechanism

Mechanism	J calculation formula
Ballscrew 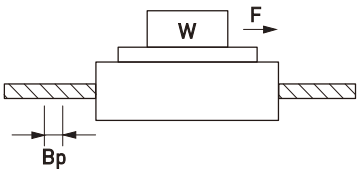	$J = J_B + \frac{MB_P^2}{4\pi^2}$
Belt(Conveyor) 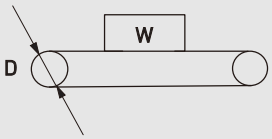	$J = \frac{1}{4} W_b D^2$ *Excluding drum J
Rack and pinion 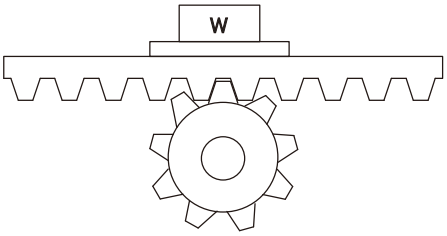	$J = J_p + (M_r + W_r)\frac{D^2}{4}$
Reduction gear 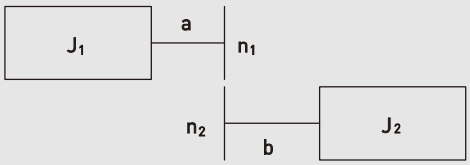	$J = J_1 + (\frac{n_2}{n_1})^2 J_2$ Inertia on shaft "a"

List of symbol:
J : Inertia [kg-m^2]
J_B : J of ball screw
J_P : J of pinion
M : Mass [kg]
M_r : Mass of rack [kg]
W_b : Workpiece weight on belt [kg]
W_r : Workpiece weight on rack [kg]
P : Lead
D : Drum diameter [m]
n_1 : A rotational speed of a shaft [r/min]
n_2 : A rotational speed of b shaft [r/min]

10.10.4 Operating pattern (motion velocity profile)

■ Trapezoidal profile

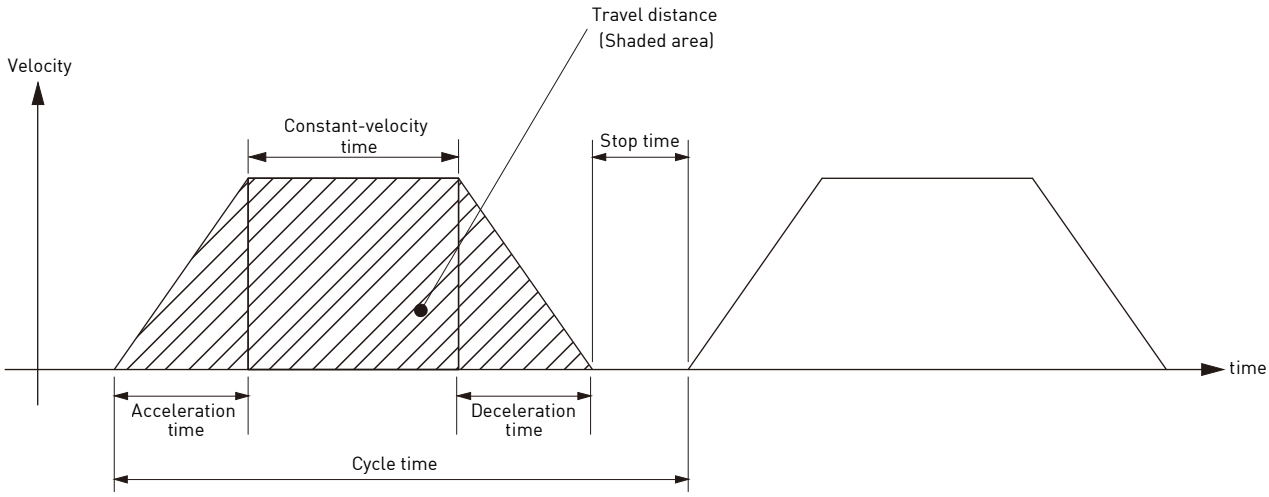

■ Triangle profile

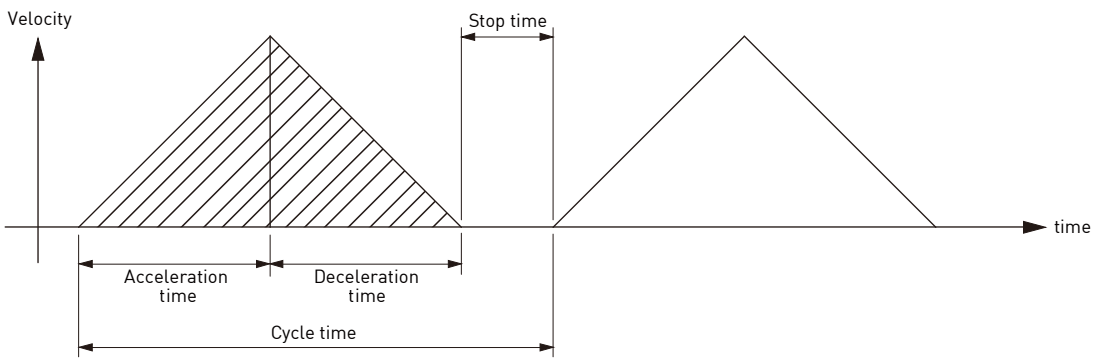

10.10.5 Motor selection example - ballscrews mechanism

Workpiece weight W = 5 [kg]
Ball screw length B_L = 0.5 [m]
Ball screw diameter B_D = 0.02 [m]
Ball screw lead B_P = 0.02 [m]
Ball screw efficiency B_{eff} = 0.9
Travel distance 0.3 [m]
Coupling inertia $J_C = 10 \times 10^{-6}$ [kg-m^2]

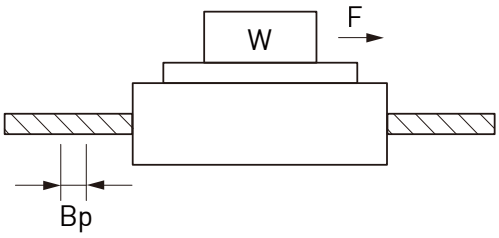

Running pattern(velocity profile)

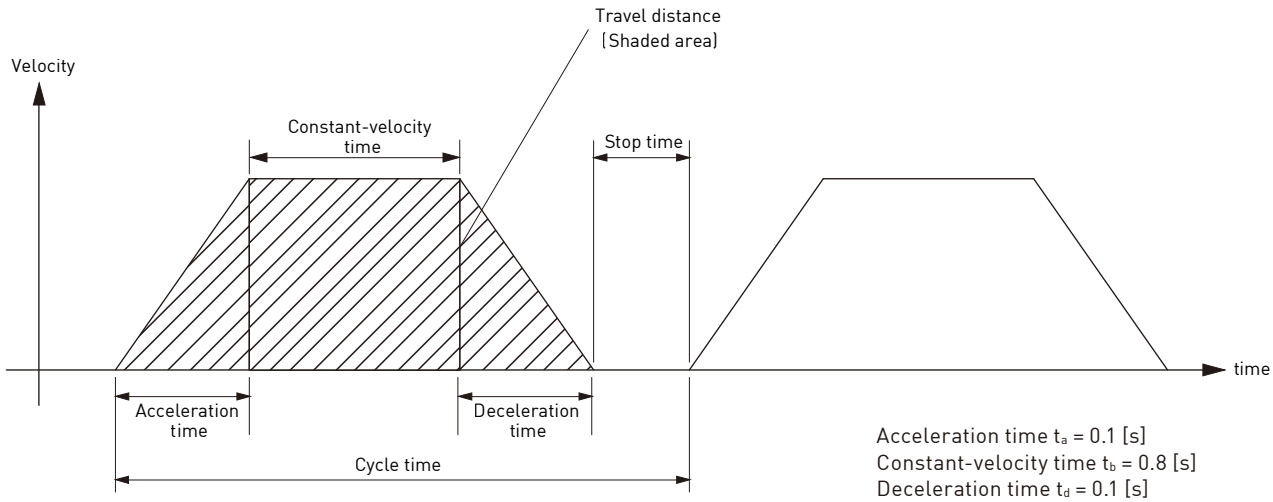

Acceleration time t_a = 0.1 [s]
Constant-velocity time t_b = 0.8 [s]
Deceleration time t_d = 0.1 [s]
Cycle time t_c = 2 [s]
Travel distance 0.3[m]
Stop time t_s = 1.0 [s]

Ballscrew weight

$$B_W = \rho \times \pi \times \left(\frac{B_D}{2}\right)^2 \times B_L$$

$$= 7.9 \times 10^3 \times \pi \times \left(\frac{0.02}{2}\right)^2 \times 0.5$$

$$= 1.24\,[\mathrm{kg}]$$

Load inertia

$$J_L = J_C + J_B + J_W = J_C + \frac{1}{8} B_W \times B_D^{\ 2} + \frac{W \times B_P^{\ 2}}{4\pi^2}$$

$$= 0.00001 + \frac{1.24 \times 0.02^2}{8} + \frac{5 \times 0.02^2}{4\pi^2}$$

$$= 1.226 \times 10^{-4}\ [kg-m^2]$$

Provisional motor selection

Choose Hiwin 200W Servo motor : $J_M = 0.17 \times 10^{-4}\ [kg-m^2]$

Calculation of inertia ratio

$$\frac{J_L}{J_M} = \frac{1.226 \times 10^{-4}}{0.17 \times 10^{-4}} = 7.21$$

The inertia ratio is less than 10.

Calculation of maximum velocity (Vmax)

$$\frac{1}{2} \times t_a \times V_{max} + t_b \times V_{max} + \frac{1}{2} \times t_d \times V_{max} = \text{Travel distance}$$

$$\frac{1}{2} \times 0.1 \times V_{max} + 0.8 \times V_{max} + \frac{1}{2} \times 0.1 \times V_{max} = 0.3$$

$$V_{max} = 0.334\ [m/s]$$

Calculation of motor velocity (N [r/min])

Ball screw lead $B_P = 0.02$ [m]

$$N = \frac{V_{max}}{B_P} = \frac{0.334}{0.02} = 16.7\ [rps] = 1002\ [rpm]$$

1002[rpm] is less than 3000[rpm] (rated velocity of Hiwin 200W Servo motor)

Calculation of torque

Traveling torque	$T_f = \frac{B_P}{2\pi B_{eff}}(\mu gW + F) = \frac{0.02}{2\pi 0.9}(0.1 \times 9.8 \times 5 + 0) = 0.017\ [N\text{-}m]$
Acceleration torque	$T_a = \frac{(J_L + J_M) \times \frac{2\pi N}{60}}{t_a} + T_f$ $= \frac{(1.226 \times 10^{-4} + 0.7 \times 10^{-4}) \times \frac{2\pi \times 1002}{60}}{0.1} + 0.017$ $= 0.163\ [N\text{-}m]$
Deceleration torque	$T_d = \frac{(J_L + J_M) \times \frac{2\pi N}{60}}{t_d} - T_f$ $= \frac{(1.226 \times 10^{-4} + 0.7 \times 10^{-4}) \times \frac{2\pi \times 1002}{60}}{0.1} - 0.017$ $= 0.129\ [N\text{-}m]$

Verification of maximum torque

Ta = 0.163 [N-m] < 1.91 [N-m] (Maximum torque of Hiwin 200W Servo motor)

Verification of effective torque

$$T_{rms} = \sqrt{\frac{T_a^2 \times t_a + T_f^2 \times t_b + T_d^2 \times t_d}{t_c}}$$

$$= \sqrt{\frac{0.163^2 \times 0.1 + 0.017^2 \times 0.8 + 0.129^2 \times 0.1}{2}}$$

$$= 0.048\ [N\text{-}m]$$

0.048[N-m] < 0.64[N-m](Rated torque of Hiwin 200W Servo motor)

Evaluation

Judging from the inertia ratio calculated above, selection of 200W motor is preferable, although the torque margin is significantly large.

10.11 Safety Precautions

Thank you for purchasing HIWIN's AC servo motor. Installation and operation of the motor must be in accordance with the HIWIN manual. Before using the servo motor, please read these safety instructions and precautions carefully.

Unpacking instructions

1. Before using the servo motor, please read these safety instructions and precautions carefully. HIWIN is not responsible for any damage, accident, or injury caused by incorrect handling.
2. Examine the appearance of the motor for any unusual marks or damage from shipment.
3. Inspect the wires for damage.
4. Do not disassemble the motor. Since the product design has been based on structure calculations, computer simulations, and prototype testing, do not disassemble the product without the permission of HIWIN engineers.
5. Supervise children when handling this product.
6. People with psychosomatic illness or insufficient experience should not handle this product, unless under the direct supervision of managers or product narrators.

* If any items are damaged or incorrect, please contact your distributor or HIWIN sales representative.

Safety instructions

1. The product can only be repaired by HIWIN engineers. Please send the product back to us if there is any unusual phenomenon.
2. Do not hold the motor by its wire harness or shaft.
3. Do not hit the motor or shaft. Shock can damage the encoder inside the motor.
4. Do not apply loads to the motor shaft that are in excess of the specified value.
5. Protect the motor and encoder from high electrical noise, vibration, and unusual temperatures.
6. Do not change the motor parts or disassemble the screws. HIWIN will not be responsible for any damages, injuries, or accidents that may occur.

Wiring instructions

1. Ensure the specified power input value before using the product, and verify that the proper power supply is being used.
2. Before operation, please ensure that the motor, brake, and encoder are connected correctly. Incorrect wiring may cause abnormal motor operation or even cause permanent damage to the motor.
3. To avoid voltage coupling and electrical noise on the encoder, ensure adequate separation of the motor power wires and the encoder wires.
4. Ensure that the motor ground wire is connected to the ground terminal on the servo drive.
5. Do not perform a dielectric voltage-withstand test on any encoder terminal. The test may cause damage to the encoder.

Operation instructions

1. Higher than maximum specified current may cause demagnetization of magnetic components inside the motor.
2. The AC servo motor is designed to operate through a dedicated servo drive. Do not connect to a commercial power source (100/200V AC, 50/60 HZ). The motor will not operate correctly and may cause permanent damage.
3. The motor must be operated within its specified range.

4. Attention should be given to ensure adequate cooling and ventilation of the motor during operation.
5. For long term use, the motor shaft should be resupplied with proper and sufficient oil during the period of operation.
6. If any abnormal odor, noise, smoke, temperature rises or vibration is detected, stop the motor immediately. Remove power from the servo drive and isolated the motor.

Motor International Standard

		Drive	Motor
CE Directives CE	EMC Directives	EMC: EN61800-3 EN55011 EN61000-6-2 EN61000-6-4 EN61000-2-4 IEC60146-1-1 IEC61000-2-1	EN55011 EN61000-6-2 EN61000-6-4
	Low-Voltage Directives	LVDS:EN61800-5-1	EN60034-1 EN60034-5
UL Directives		UL:E348161 (D2T 100W/400W/1000W)	UL1004-1 UL1004-6

Maintenance and Storage instructions

1. Do not store the product in an inflammable environment or with chemical agents.
2. Store the product in a place without humidity, dust, harmful gases, or liquids.
3. The motor shaft opening is neither waterproof nor oil-proof. Do not install the motor in an environment where there is harmful gas, liquid, excessive moisture, or water vapor.
4. Do not store the servo motor where it will be subjected to vibration or shock in excess of the specified limit.
5. The storage and transportation temperature of this product: -20℃~+65℃
6. Clean：Wipe with Alcohol (70%)
7. Before shipping, the motor shaft is coated with antirust oil to protect the motor shaft against rust formation. However, the material of the motor shaft is not entirely rust-proof. When the motor storage time has exceeded six months, please inspect and examine the motor shaft and resupply with proper and sufficient antirust oil at least once every three months thereafter.
8. Product disposal：Follow the local laws and regulations for recycling.

A one year guarantee is provided from the date of delivery. For product damage caused by improper operation (Please refer to the notes and instructions in this operation manual). HIWIN will not be held responsible for replacing or maintaining the product as a result of any natural disasters that may occur during this period.

Warning：For the proper use of the HIWIN AC servo motor read these safety precautions carefully before installation, operation, and maintenance.

Warning：Do not touch when motor operating to avoid being scalded.

- Please read “warning signs”.
- Turn power off before clean product.
- Read manual before use.
- If the product is used under overload condition shell temperature rises.
- Without manufacturer’s permission, please do not arbitrarily modify the device.
- It is difficult to ensure electromagnetic compatibility (EMC) problems do not occur in some environments.
- Removal of damaged power cable fasteners, with care and with attention for power cable fasteners.
- Avoid impact on of shaft end and encoder.
- Products cannot be used in environment with flammable materials.

10.12 Step Motor

Two Phase Step Motor

Step Motor Ordering Information

FR ST 0 21 0 24 01

Product	Model	Phase/Shaft	Type	Step Angle	Voltage	Serial number
Brushless Motor	ST: Step Motor	0:2S (2 phase/single axis) 1:2D (2 phase/double axis)	1X:ST40 2X:ST55	0:F (step angle 1.8 meh.)	24V	01~99

Characteristic Curves

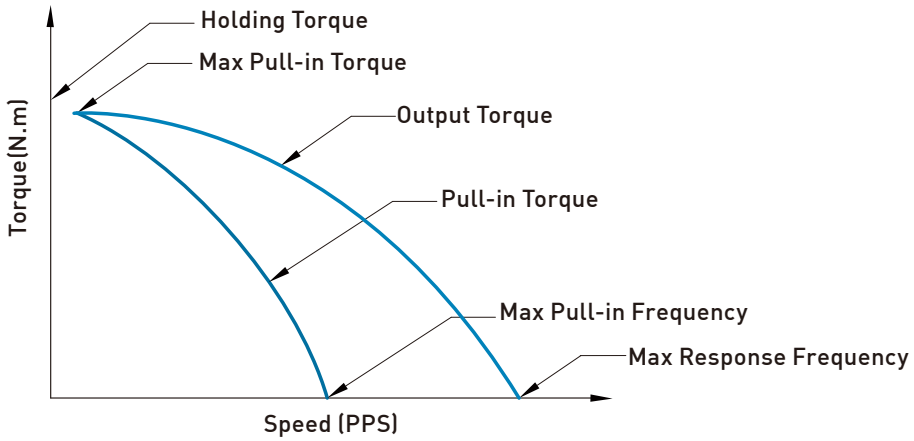

- **Pull-in Torque**
  It is the maximum torque at given speeds that the motor can start, stop or reverse with the input pulses. Motor can start, stop or reverse in synchronism under starting torque curve, this region called self-start region.
- **Max. pull-in torque**
  The max. motor torque that can start, stop or reverse when the starting frequency is less than 10pps.
- **Max. starting frequency**
  Max. input pulse frequency when the motor is at no load. Motor can start and stop immediately.
- **Pull-out Torque**
  Maximum torque at given speeds that the motor can generate while running. If the motor runs outside of this curve, it will stall.
- **Max. response frequency**
  The frequency of motor that no output torque and motor can not start and stop immediately.
- **Holding Torque**
  Amount of torque that the motor produces when it has rated current flowing through the windings but the motor is at rest.

10.12.1 Model of Step Motor

40mm Step Angle 1.8° ST40 Series

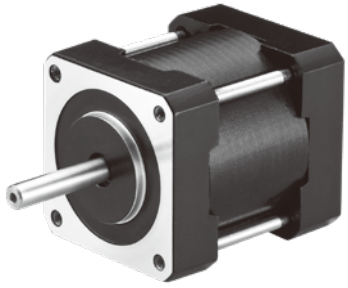

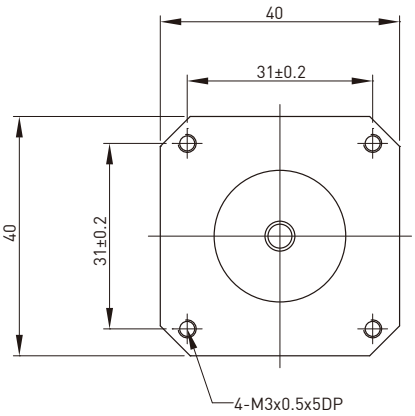

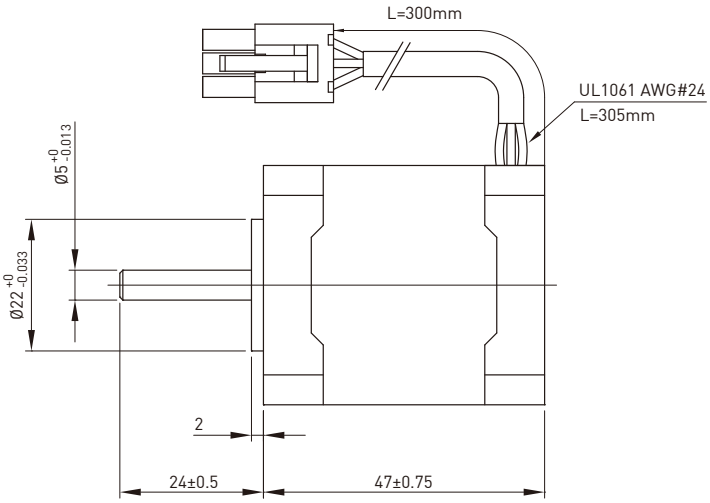

Model	Winding type	Holding torque	Current	Resistance	Inductance	Rotor inertia	Leads	Motor length	Input voltage
Single axis		N.m	A/phase	Ω/phase	mH/phase	g-cm2		(L)mm	Vdc
FRST01102401	Single Pole	0.27	0.95	3.3	3.5	19	6	47	4

Torque- Speed Curve

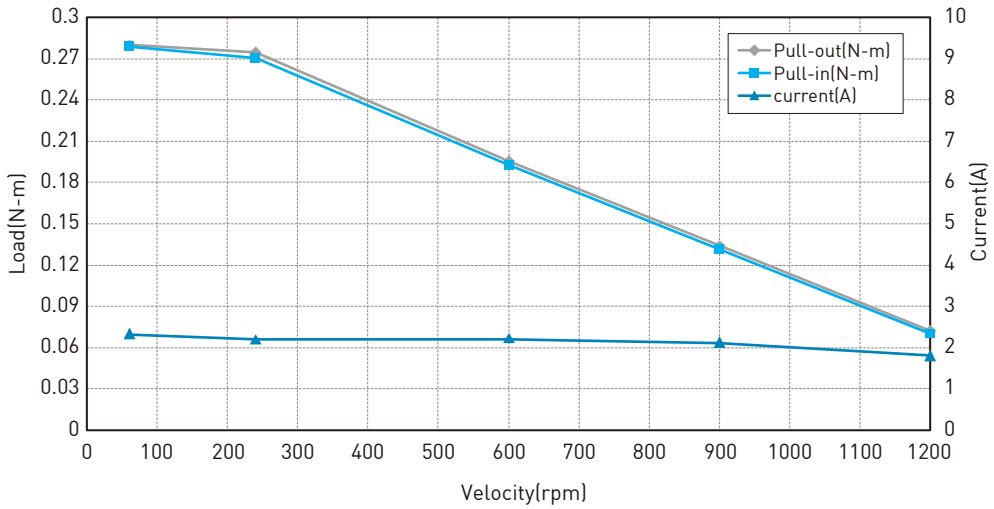

Wiring Diagram

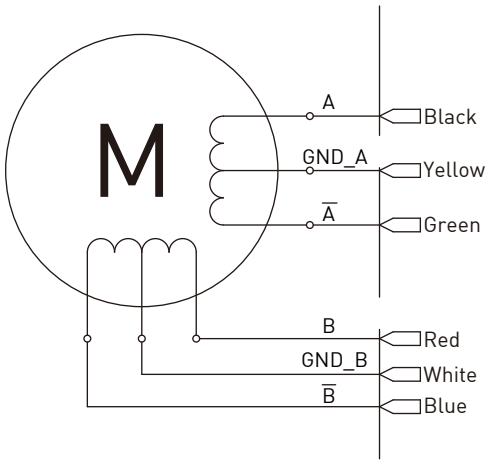

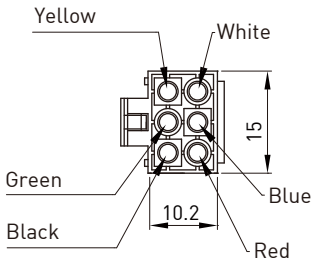

(6 Pin male connector)

Notice:
★ Please use the wire which is larger than 0.5□^{2} and as short as possible for power and motor connection.
★ Support 2 phase stepping motor (6 lead wire).

55mm Step Angle 1.8° ST55 Series

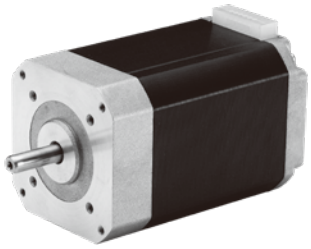

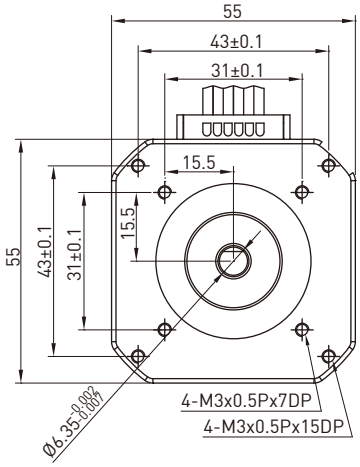

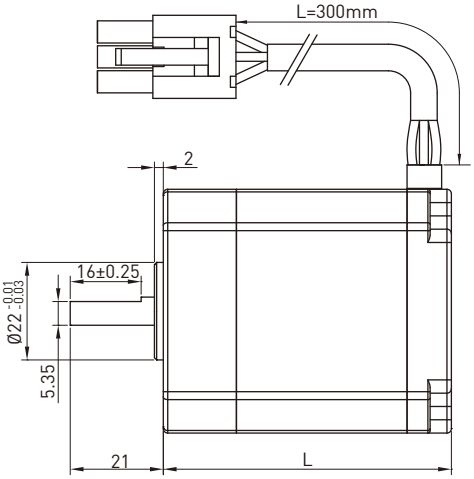

Model		Winding type	Holding torque	Current	Resistance	Inductance	Rotor inertia	Leads	Motor length	Input voltage
Single axis	Double axis		N.m	A/phase	Ω/phase	mH/phase	g-m2		(L)mm	Vdc
FRST02102401	FRST12102401	Single Pole	0.25	1.3	2.8	3.3	90	6	50.5	3
FRST02202401	FRST12202401	Single Pole	0.6	1.3	4.0	7.0	171	6	65	4
FRST02302401	FRST12302401	Single Pole	1.05	1.2	5.6	13.0	290	6	87	5.3

Torque- Speed Curve

FRST02102401

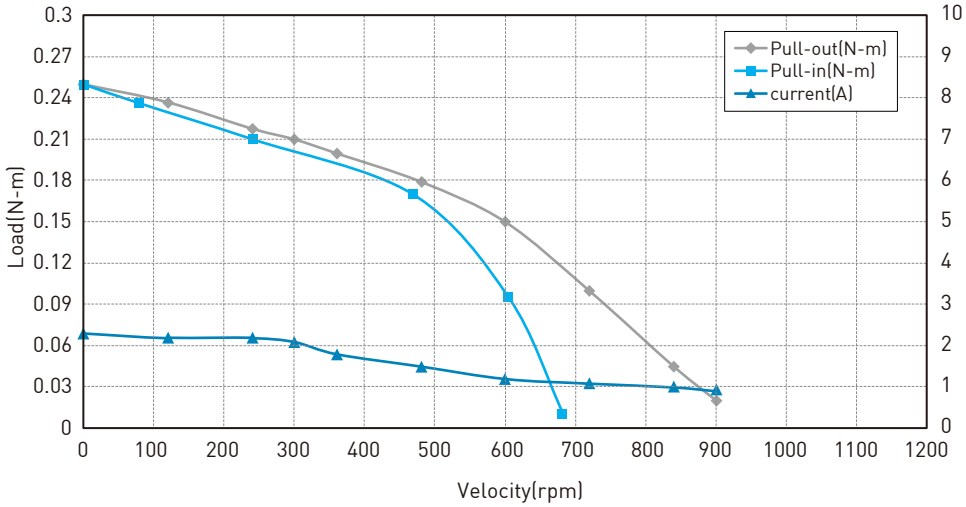

FRST02202401

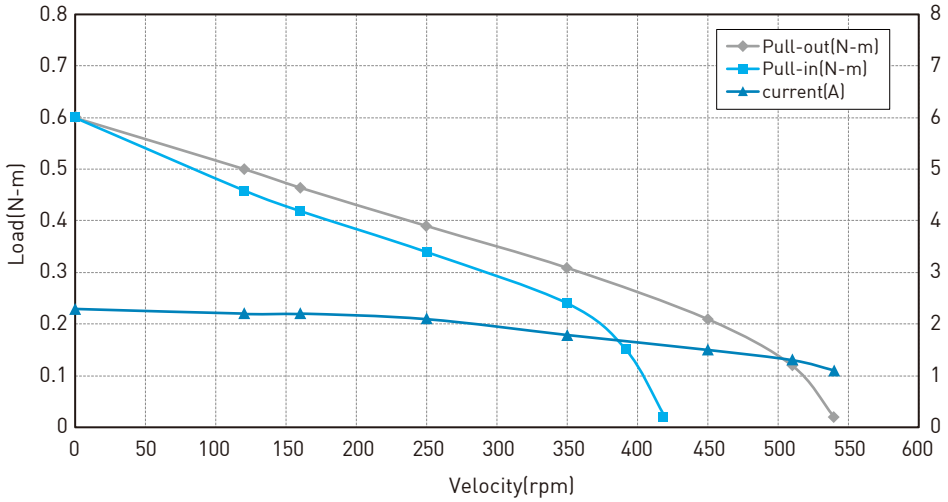

FRST02302401

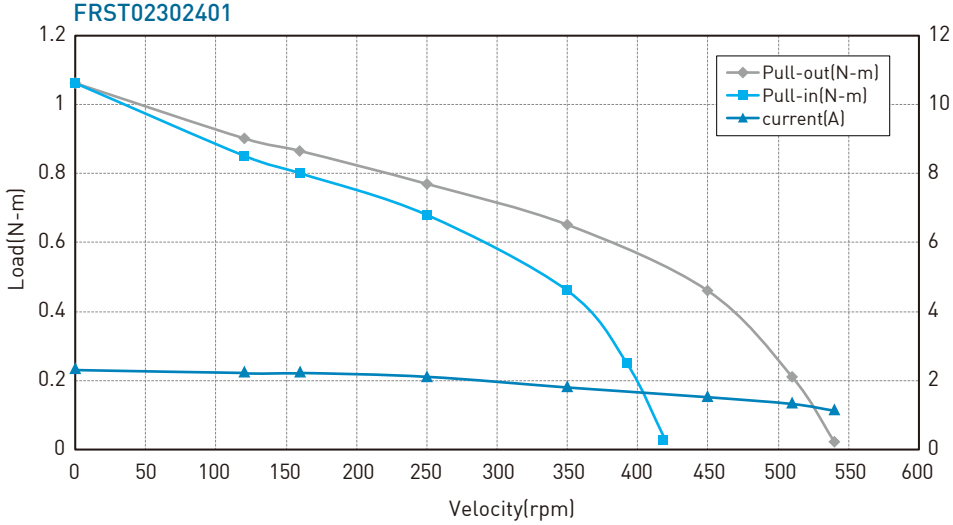

Wiring Diagram

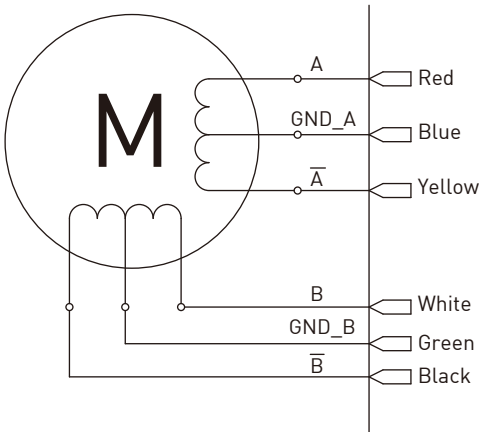

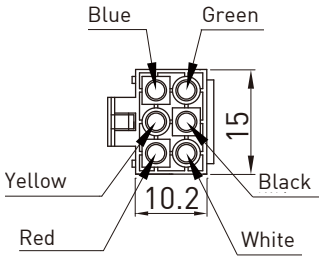

(6 Pin male connector)

Notice:

★ Please use the wire which is larger than 0.5^2 and as short as possible for power and motor connection.

★ Support 2 phase stepping motor (6 lead wire).

10.12.2 Step Drive (STD-24A)

Specifications

- 2 phase stepping motor (6 lead wire)
- Micro-stepping drive function
- Constant output current 0.2A~2A
- Max Frequency response 150000Hz
- Support Pulse/Direction Pulse (1P)
- Support CW/CCW Pulse (2P)
- Support Quadrature Pulse (A/B)
- Additional Positive/Negative pole limit control
- Motor exciting release
- RoHS certificate
- CE certified

Connect and Setting

1. LED State

LED display

Display	Color	Function
LED1	Red	Power light
LED2	Green	State light

State light Information

Drive state	LED state
Forward	low speed flash (0.5s/per)
Reverse	high speed flash (0.2s/per)
Limit Input	low speed flash (1s/per)
Exciting release	dark
Stand by	light

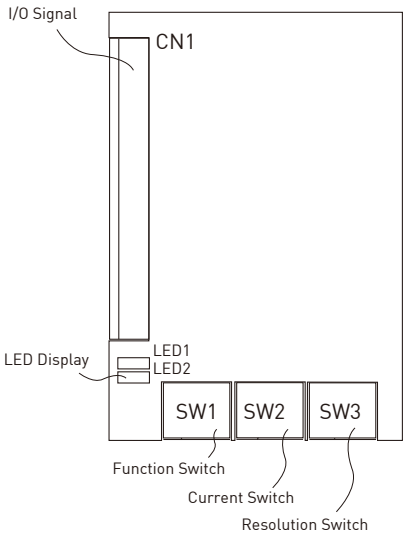

2. Input / Output

Interface	Pin	Input / Output	Mark
(CN1)	1	Power input	DC24V
	2		Power input
	3	Motor connect	COM A
	4	Motor connect	COM B
	5	Motor connect	A +
	6	Motor connect	A -
	7	Motor connect	B +
	8	Motor connect	B -
	9	Pulse single input	CW -
	10	Pulse single input	CW +
	11	Pulse single input	CCW -
	12	Pulse single input	CCW +
	13	Control single	MF
	14	Control single	LSF
	15	Control single	LSR
	16	No use	NC

Input Pulse Single Wiring Diagram

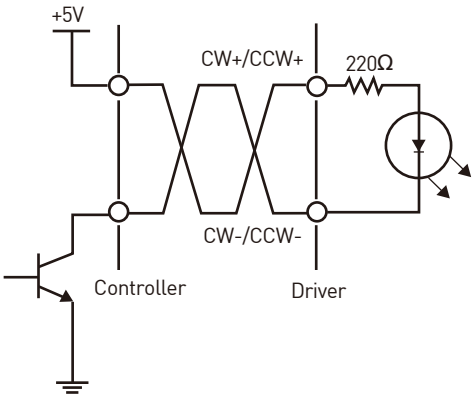

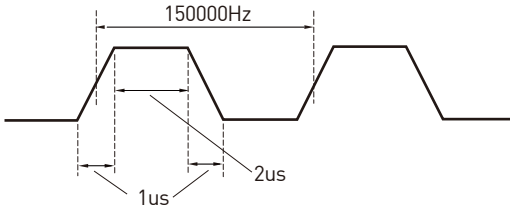

Notice:
* Please use the wire which is larger than 0.5^2 and as short as possible for power and motor connection.
* Pulse width please corresponds to the sketch.
* These signal types are accepted by drive.

A. Pulse/Direction (1P)

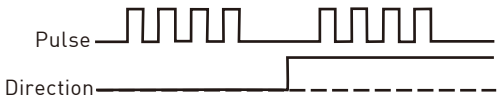

B. CW/CCW (2P)

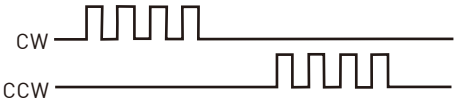

C. Quadrature (A/B)

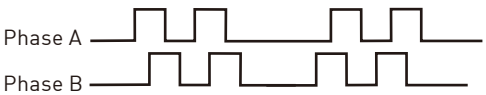

● Limit Input、Motor Disable Wiring Diagram

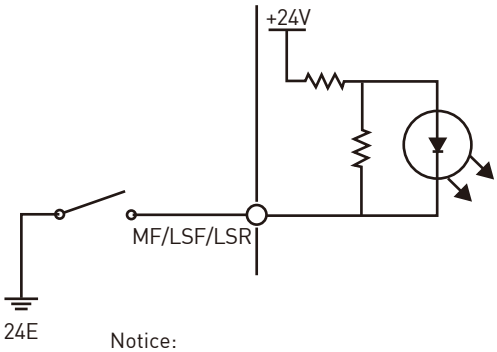

Notice:
* The function was triggered by closing the switch (ON).
* The forward limit signal is ON motor will not rotate even receiving forward pulse command. Furthermore, The reverse limit signal is ON motor will not rotate even receiving reverse pulse command.
* Motor release signal is ON, exciting release.

HIWIN PCI-4P Wiring Example

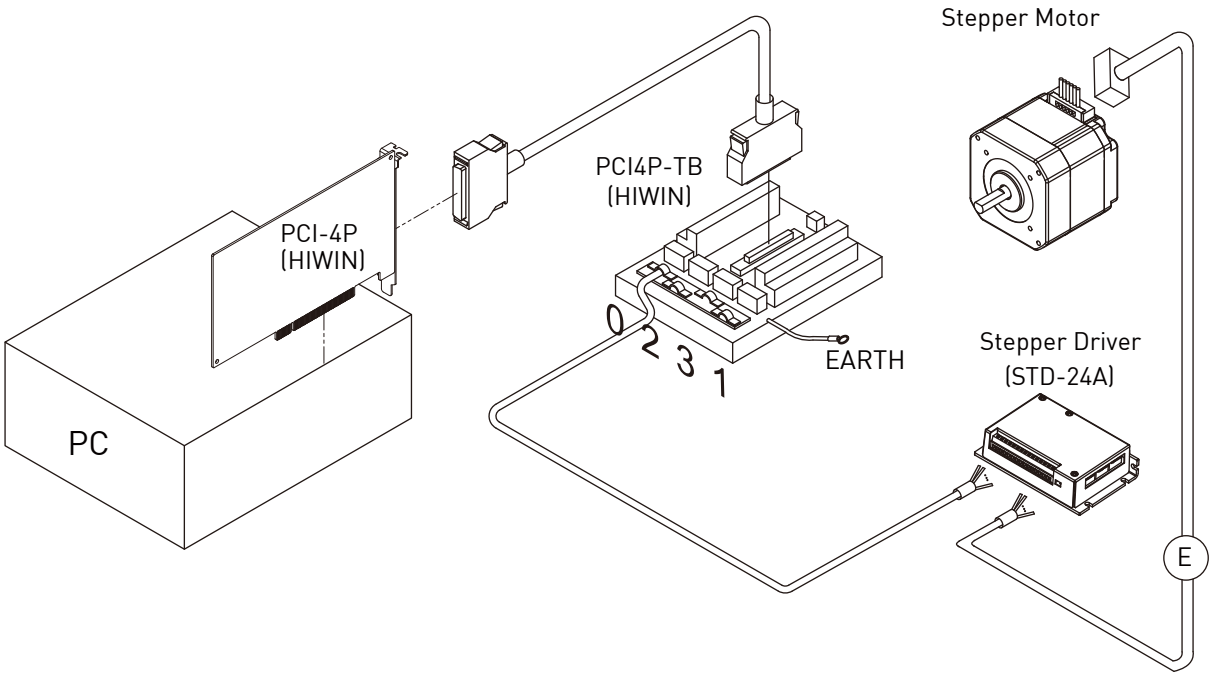

PLC Wiring Example

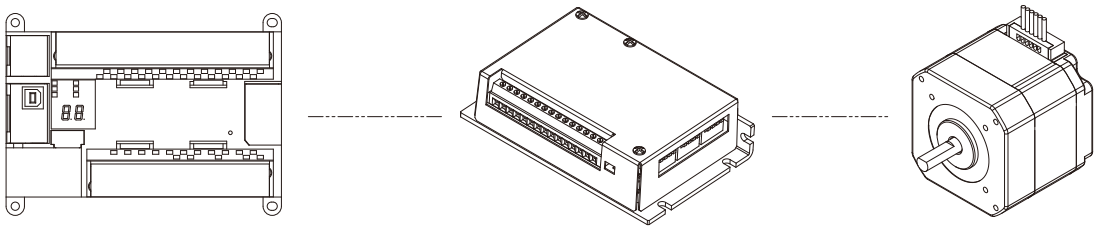

PLC Motion Controller | Stepper Motor Drive (STD-24A) | Stepper Motor

Connect Diagram

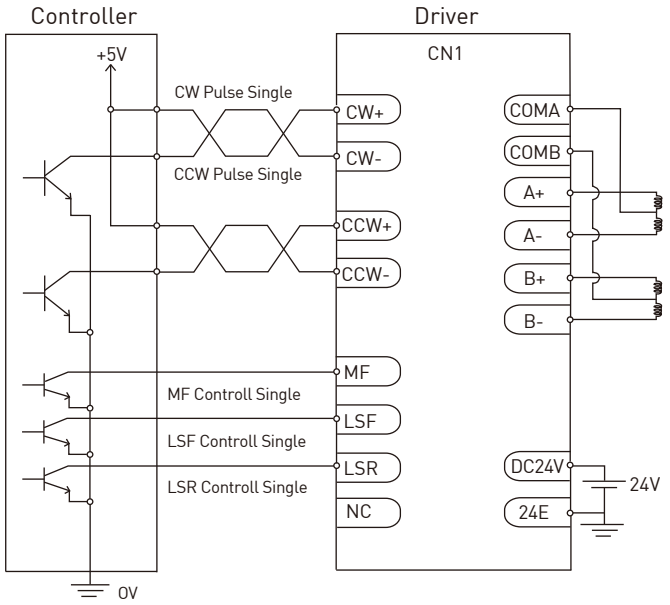

Notice:
* Please input DC+5V pulse.
* Please use twisted line or shading line as signal line which is as short as possible.

Size Diagram

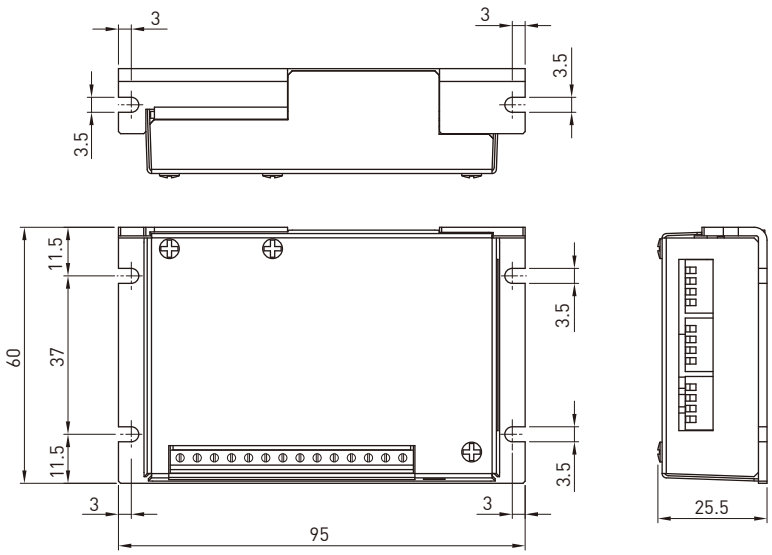

Stepping Motor Accessories

Name	Type	Connect	Description	Signal	Color	7007-6RH	Cord-end sleeve terminal
Ⓔ Stepping Motor External Cable	HV00FRSTP□□A	MOTOR OUTPUTS	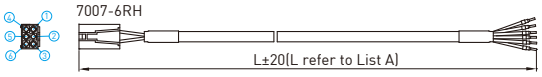	COM A	Blue	1	COM A
				A-	Yellow	2	A-
				A+	Red	3	A+
				COM B	Green	4	COM B
				B-	Black	5	B-
				B+	White	6	B+

List A

□□	30	50	70	A0
L (m)	3	5	7	10

10.13 HIWIN Robot and Motor adaptor Flange

Motor Flange List

	Motor Type								
Model	AC 50W	AC 100W	AC 200W	AC 400W	AC 750W	ST40-11	ST55-21	ST55-22	ST55-23
KK30	-	-	-	-	-	-	-	-	-
KK40	F2	F2	-	-	-	F3	F3	F3	F3
KK50	F2	F2	-	-	-	F3	F3	F3	F3
KK60	F2	F2	-	-	-	F5	F5	F5	F5
KK80	F3	F3	F0	F0	-	-	-	-	-
KK86	F3	F3	F0	F0	-	-	-	-	-
KK100	-	-	F0	F0	F1	-	-	-	-
KK130	-	-	F1	F1	F2	-	-	-	-
SK60	F2	F2	-	-	-	F5	F5	F5	F5
SK86	F3	F3	F0	F0	-	-	-	-	-
KA100	F1	F1	-	-	-	-	-	-	-
KA136	F3	F3	F0	F0	-	-	-	-	-
KA170	-	-	F0	F0	F1	-	-	-	-
KA200	-	-	F1	F1	F0	-	-	-	-
KS100	-	-	-	-	-	-	-	-	-
KS140	-	-	F0	F0	-	-	-	-	-
KS180	-	-	-	-	-	-	-	-	-
KU60	KA100-F1	KA100-F1	-	-	-	-	-	-	-
KU80	KK86-F3	KK86-F3	F0	F0	-	-	-	-	-
KE50	KA100-F1	KA100-F1	-	-	-	-	-	-	-
KE65	KA100-F1	KA100-F1	-	-	-	-	-	-	-

Robot connect Servo Motor

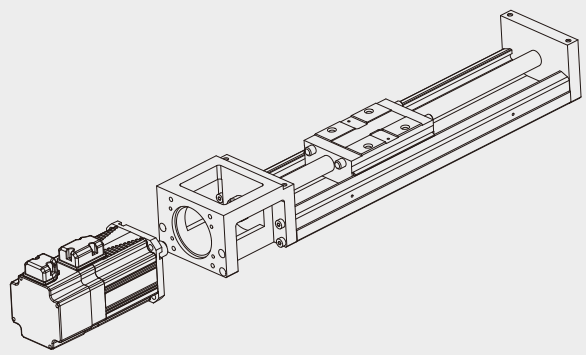

Robot connect Stepping Motor

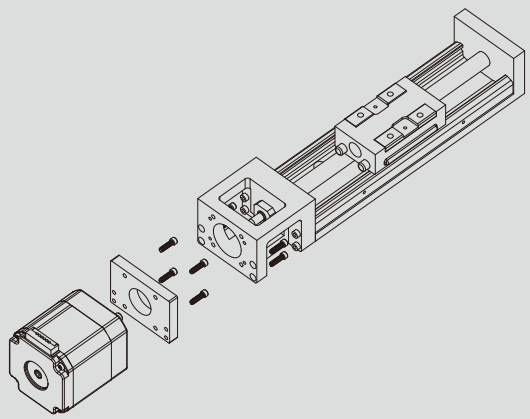

Single-Axis Robot

11. Lubricating Device

11.1 Grease Gun Unit

HIWIN offers different capacities and packages for grease gun reload, depending on various requirements. The grease gun could not only be equipped with normal grease nozzle, but also be replaced with other nozzles for other kinds of grease nipples.

Grease Nipple: M6, PT1/8

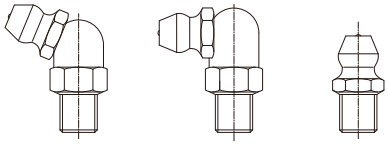

Model no.	GN-80M	GN-400C
Dimen-sions	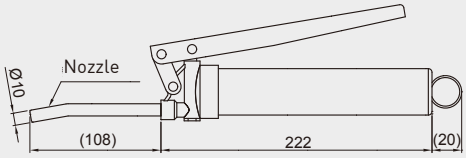	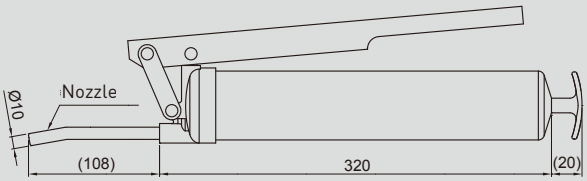
Spec.	1. Working pressure: 15 MPa 2. Output: 0.5~0.6 c.c./Stroke 3. Weight: 520 g(grease excluded) 4. Grease reload: 70 g flexible tube or 120 ml bulk loading	1. Working pressure: 15 MPa 2. Output: 0.8~0.9 c.c./Stroke 3. Weight: 1150 g (grease excluded) 4. Grease reload: 14 o.z. cartridge pipe or 400 ml bulk loading

11.2 Grease Nozzle Kit (Model no. GNZ-05-BOX)

HIWIN's grease nozzle kit offers various styles to adapt to different types of grease nipples.

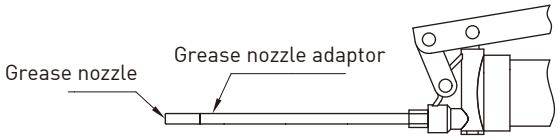

11.2.1 Grease Nozzle Adaptor

Model no.	Dimensions
GT-PT1/8-M5	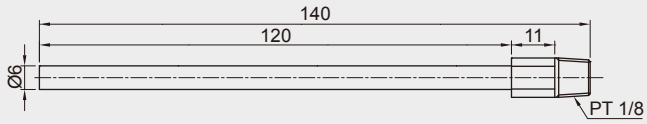

11.2.2 Grease Nozzle

Model no.	Dimensions	Lubricating Type
GNZ-L-M5	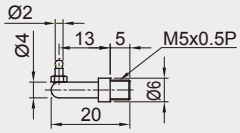	Minimized grease hole
GNZ-P-M5	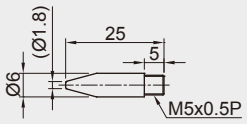	Minimized grease hole
GNZ-R-M5	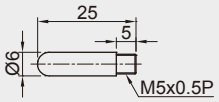	Dent Nipple (DIN3405)
GNZ-C-M5	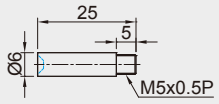	Nipple (M3, M4 Thread)

11.3 Grease

HIWIN offers various lubricants based on the user's environment such as a general purpose grease, heavy load, low particle emitting, high speed, etc. Depending on the user's re-lubrication interval, choices for different capacities and packages of grease are available.

11.3.1 Packaging

70g Flexible tube	400g Pipe	1kg Can

◎ HIWIN G01 Grease for Heavy-loading

Features:

1. Excellent wear and pressure resistance under heavy load conditions
2. Low friction in low temperatures
3. Water resistant
4. Available for use in central lubrication systems

Basic Properties:

Color		Light yellow
Base Oil		Mineral oil
Consistency Enhancer		Polyurea
Additive		Solid lubricant
Service Temp. (˚C)		-15~115
NLGI-grade (0.1mm)		310-340
Viscosity (cst)	40˚C	500
	100˚C	30
Drop Point (˚C)		＞170

◎ HIWIN G02 Grease for Low Particle-emission

Features:

1. Low particle emission rate a suitable for clean room environments
2. Wear resistant
3. For long term usage and wide temperature ranges
4. Consisting of synthetic hydrocarbon oil and special calcium soap to resist against oxidation and corrosion

Basic Properties:

Color		Beige
Base Oil		Synthetic hydrocarbon oil
Consistency Enhancer		Special calcium soap
Service Temp. (˚C)		-30~140
NLGI-grade (0.1mm)		265-295
Viscosity (cst)	40˚C	100
	100˚C	15
Drop Point (˚C)		＞180

◎ HIWIN G03 Grease for Low Particle-emitting (High Speed)

Features:

1. Low particle emission rate suitable for clean room environments
2. Wear resistant
3. For long term usage and wear resistance under high speed conditions

Basic Properties:

Color		Beige
Base Oil		Synthetic hydrocarbon oil
Consistency Enhancer		Special calcium soap
Service Temp. (˚C)		-45~125
NLGI-grade (0.1mm)		265-295
Viscosity (cst)	40˚C	30
	100˚C	5.9
Drop Point (˚C)		＞210

◎ HIWIN G04 Grease for High Speed

Features:

1. Wear resistant under high speed conditions
2. Low friction under high speed conditions
3. Water resistant

Basic Properties:

Color		Beige
Base Oil		Ester / PAO
Consistency Enhancer		Lithium soap
Service Temp. (˚C)		-35~120
NLGI-grade (0.1mm)		260-280
Viscosity (cst)	40˚C	25
	100˚C	6
Drop Point (˚C)		＞225

◎ HIWIN G05 Grease for General Purpose

Features:

1. Wear resistant
2. Low friction
3. Long-life
4. Low oxidation tendency
5. Water resistant
6. Corrosion resistant

Basic Properties:

Color		Brown
Base Oil		Mineral oil
Consistency Enhancer		Lithium soap
Service Temp. (˚C)		-15~120
NLGI-grade (0.1mm)		2
Viscosity (cst)	40˚C	200
Drop Point (˚C)		190

◎ HIWIN G06 Grease for High Frequency or Short-stroke Conditions

Features:

1. Good wear resistance under high frequency (1.5~3G) or short-stroke conditions
2. Long term grease, suitable for a wide temperature range
3. Can be used in plastic/steel and plastic/plastic components, compatible with elastomers and plastic materials

Basic Properties:

Color		Beige
Base Oil		PAO
Consistency Enhancer		Special lithium soap
Service Temp. (˚C)		-45~130
NLGI-grade (0.1mm)		265-295
Viscosity (cst)	40˚C	32
	100˚C	6
Drop Point (˚C)		190

◎ HIWIN G07 Grease for Low Temperature Conditions

Features:

1. For low temperature conditions: -50˚C to 0˚C.
2. Low starting and running torques particularly at low temperatures

Basic Properties:

Color		Beige
Base Oil		Mineral oil
Consistency Enhancer		Lithium-calcium soap
Service Temp. (˚C)		-50~80
NLGI-grade (0.1mm)		310-340
Viscosity (cst)	40˚C	14
	100˚C	3

HIWIN Single-Axis Robot Inquiry Form

Date: / /

Company		Dept.	
Name		Title	
Tel		E-Mail	
Fax		Address	

1. Tentative "K" model	
2. Effective stroke(mm)	
3. Positioning accuracy (mm)	
4.Repeatability (mm)	
5.Installation Method	☐ horizontal ☐ vertical ☐ upside down ☐ incline ☐ side installation ☐ XY axis ☐ XZ axis ☐ XYZ axis ☐ Gate ☐ others (Please provide a drawing)
6.Special environment	☐ high temperature ____℃ ☐ low temperature ____℃ ☐ vibration ☐ oil ☐ water ☐ clean room ☐ corrosive chemical ☐ humid ☐ dust ☐ others_____
7.Space limit(mm)	L _____ xW _____ xH _____ . 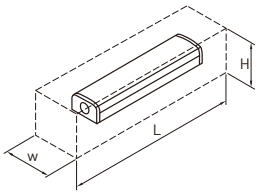
8.Screw lead(mm)	_____mm
9.Max speed / acceleration	
10.Motor operation	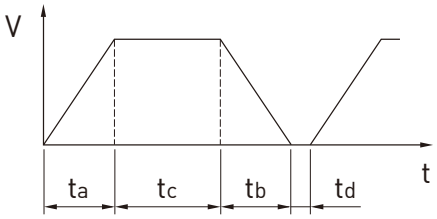 Max speed V= ____mm/s ta= _____sec tb= _____sec tc= _____sec td= _____sec
11.Load(kg)	_____kg(_____N)
12.Load direction	☐ offset ☐ Pitching ☐ Yawing ☐ Rolling X _____ xY _____ xZ _____ . X= _____mm Y= _____mm Z= _____mm 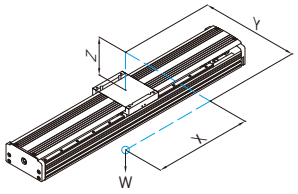
13.Expected service life	
14.Accessories	☐ motor ☐ drive ☐ coupling ☐ limit switch ☐ decelerator ☐ XY connector ☐ cable protection chain ☐ others_____
15.Other comments	
16.Purpose	☐ transport ☐ automatic dispenser ☐ loader/unloader ☐ testing equipment ☐ transmit ☐ others_____

Single-Aixs Robot (Original Instructions) Technical Information

Publication Date：October 2006, first edition
June 2019, 16th edition

1. HIWIN is a registered trademark of HIWIN Technologies Corp.. For your protection, avoid buying counterfeit products from unknown sources.
2. Actual products may differ from specifications and photos provided in this catalog. These differences may be the result of various factors including product improvements.
3. HIWIN website for patented product directory: http://www.hiwin.tw/Products/Products_patents.aspx
4. HIWIN will not sell or export products or processes restricted under the "Foreign Trade Act" or related regulations. Export of restricted products should be approved by proper authorities in accordance with relevant laws and shall not be used to manufacture or develop nuclear, biochemical, missiles or other weapons.

Copyright © HIWIN Technologies Corp.

HIWIN®

Global Sales and Customer Service Site

HIWIN GmbH
OFFENBURG, GERMANY
www.hiwin.de
www.hiwin.eu
info@hiwin.de

HIWIN Schweiz GmbH
JONA, SWITZERLAND
www.hiwin.ch
info@hiwin.ch

HIWIN KOREA
SUWON · CHANGWON, KOREA
www.hiwin.kr
info@hiwin.kr

HIWIN USA
CHICAGO, U.S.A.
www.hiwin.com
info@hiwin.com

HIWIN s.r.o.
BRNO, CZECH REPUBLIC
www.hiwin.cz
info@hiwin.cz

HIWIN CHINA
SUZHOU, CHINA
www.hiwin.cn
info@hiwin.cn

HIWIN JAPAN
KOBE · NAGOYA · TOKYO · TOHOKU · NAGANO · SHIZUOKA · HOKURIKU · HIROSHIMA · FUKUOKA · KUMAMOTO, JAPAN
www.hiwin.co.jp
info@hiwin.co.jp

HIWIN FRANCE
STRASBOURG, FRANCE
www.hiwin.fr
info@hiwin.de

HIWIN BULGARIA
SOFIA, BULGARIEN
www.hiwin.bg
info@hiwin.bg

HIWIN Srl
BRUGHERIO, ITALY
www.hiwin.it
info@hiwin.it

HIWIN SINGAPORE
SINGAPORE
www.hiwin.sg
info@hiwin.sg

HIWIN TECHNOLOGIES CORP.
No. 7, Jingke Road,
Taichung Precision Machinery Park,
Taichung 408208, Taiwan
Tel: +886-4-23594510
Fax: +886-4-23594420
www.hiwin.tw
www.hiwinsupport.com
business@hiwin.tw

HIWIN MIKROSYSTEM CORP.
No. 6, Jingke Central Road,
Taichung Precision Machinery Park,
Taichung 408211, Taiwan
Tel: +886-4-23550110
Fax: +886-4-23550123
www.hiwinmikro.tw
business@hiwinmikro.tw

The specifications in this catalog are subject to change without notification.

Copyright © HIWIN Technologies Corp.
©2019 FORM K99TE16-1906 (PRINTED IN TAIWAN)